Matrices and Determinants

Rajat Kalia(Content Expert) and Manish Kalia

9 April, 2026

(HQ) HN 764 / 765 , Sector 41-A, Chandigarh , 160036

SCO 3 , Sector 20-D, Chandigarh, 160020

SCO 24, Sector 41-D, Chandigarh , 160036

https://www.alphaclasses.com/

https://rk-edu.blogspot.com/

Definition A *matrix* is an ordered rectangular array of numbers or functions. The numbers or functions are called the elements or the entries of the matrix

We denote matrices by capital letters. The following are some examples of matrices

$$A=\begin{bmatrix} e^{2x}\sin x & e^{2x}\sin 2x \\ e^{4x}\sin x & e^{4x}\sin 2x \end{bmatrix},$$

$$B=\begin{bmatrix} -1 & -3 \\ -4 & 6 \end{bmatrix}$$

In General an $m\times n$ matrix has the following rectangular array:

$$\begin{bmatrix} a_{11} & a_{12} & a_{13} & a_{14} & \ldots\ldots & a_{1n} \\ a_{21} & a_{22} & a_{23} & a_{24} & \ldots\ldots & a_{2n} \\ a_{31} & a_{32} & a_{33} & a_{34} & \ldots\ldots & a_{3n} \\ a_{41} & a_{42} & a_{43} & a_{44} & \ldots\ldots & a_{4n} \\ . & . & . & . & . & . \\ a_{m1} & a_{m2} & a_{m3} & a_{m4} & \ldots\ldots & a_{mn} \end{bmatrix}_{m\times n}$$

Symbolically

$$\boxed{A=[a_{ij}]_{m\times n};1\le i\le m,1\le j\le n\forall i,j\in N}$$

- ***Where Element=*** a_{ij} ***,i=row,j=column***

Order of a matrix= $m\times n$

Where m represents number of row and n represents number of columns

Types of Matrices

(i) **Column matrix:** A matrix is said to be a *column matrix* if it has only one column.

For example: $A=\begin{bmatrix}1\\4\\5\\6\end{bmatrix}_{4\times1}$ is a column matrix of order 4X1

☑ **Symbolically**

$$A=[a_{ij}]_{m\times1}$$

(ii) **Row matrix:** A matrix is said to be a *row matrix* if it has only one row.

For example: $A=\begin{bmatrix}1 & 5 & 2 & 6\end{bmatrix}_{1\times4}$ is a column matrix of order 1X4

☑ **Symbolically**

$$A=[a_{ij}]_{1\times n}$$

(iii) **Square matrix:** A matrix in which the number of rows are equal to the number of columns, is said to be a *square matrix*. Thus an $m\times n$ matrix is said to be a square matrix if $m=n$ and is known as a square matrix of order 'n'.

For Example $A=\begin{bmatrix}-1 & -3\\-4 & 6\end{bmatrix}_{2\times2}$ is a square matrix of order 2X2

☑ **Symbolically**

$$A=[a_{ij}]_{m\times m}$$

Note:

In a square matrix the diagonal from left hand side upper corner to right hand side lower corner is known as leading diagonal or **principal diagonal**. In the above example square matrix containing the elements -1,
6 is called the leading or principal diagonal.

(iv) **Diagonal matrix:** A square matrix all of whose elements except those in the leading diagonal, are zero is called a diagonal matrix.

For Example: $[3],\begin{bmatrix}1 & 0\\0 & 3\end{bmatrix},\begin{bmatrix}1 & 0 & 0\\0 & 2 & 0\\0 & 0 & 3\end{bmatrix}$ are diagonal matrices of order 1,2 and 3 respectively.

☑ **Symbolically**

$$A=[a_{ij}]_{m\times m} \text{ is diagonal matrix if } \boxed{a_{ij}=0,\ \text{whenever } i\neq j}$$

Note: $A=\begin{bmatrix}1&0&0\\0&2&0\\0&0&3\end{bmatrix}$ can also be represented as **diag (1,2 3)**.

(v) **Scalar matrix:** A diagonal matrix whose all the elements are equal is called a scalar matrix.

For Example $A=\begin{bmatrix}5&0&0\\0&5&0\\0&0&5\end{bmatrix}$ is a scalar matrix.

☑ **Symbolically**

$$A=[a_{ij}]_{m\times m} \text{ is a scalar matrix if}$$

$$\boxed{a_{ij}=\begin{cases}0, i\neq j\\ k, i=j\end{cases};k\neq 0}$$

(vi) **Identity matrix/Unit matrix:** A square matrix in which elements in the diagonal are all 1 and rest are all zero is called an *identity matrix*. Identity matrix of order n is denoted by I_n

For Example $I_1=[1], I_2=\begin{bmatrix}1&0\\0&1\end{bmatrix}$ are unit matrix/identity matrix of order 1 and 2 respectively.

☑ **Symbolically**

$I=[a_{ij}]_{m\times m}$ is a Identity matrix if

$$\boxed{a_{ij}=\begin{cases}1, i=j\\ 0, i\neq j\end{cases}}$$

(vii) **Zero matrix/Null Matrix:** If all the elements of a matrix (square or rectangular) are zero, it is called a null or zero matrix.

For Example: $A=\begin{bmatrix}0&0&0\\0&0&0\end{bmatrix}$ is a zero matrix.

☑ **Symbolically**

$$O=[a_{ij}]_{m\times n} \text{ is zero matrix if } \boxed{a_{ij}=0, \forall i, j}$$

Equality of matrices:

$$A=[a_{ij}]_{m\times n}, B=[b_{ij}]_{m\times n}$$

are said to be equal if
(i) they are of the same order
(ii) $a_{ij}=b_{ij}\forall i, j$

(vii) **Triangular Matrix:** A square matrix in which all the elements below the principal diagonal are zero is called Upper Triangular matrix and a square matrix in which all the elements above the principal diagonal are zero is called Lower Triangular matrix.

For Example: $A=\begin{bmatrix} a & b & c \\ 0 & d & e \\ 0 & 0 & f \end{bmatrix}, B=\begin{bmatrix} a & 0 & 0 \\ b & d & 0 \\ c & e & f \end{bmatrix}$

are respectively upper and lower triangular matrices.

Symbolically

$A=[a_{ij}]_{m\times m}$ is

Upper triangular matrix if $a_{ij}=0; i>j$

Lower triangular matrix if $a_{ij}=0; i<j$

Operations on Matrices

(i) Addition of matrices:

Any two matrices can be added if they are of the same order and the resulting matrix is of the same order.
i.e A+B=C

Symbolically

$$[a_{ij}]_{m\times n}+[b_{ij}]_{m\times n}=[c_{ij}]_{m\times n}$$

If $c_{ij=}a_{ij}+b_{ij}\forall i, j$

(ii) Multiplication of a matrix by a scalar:

The matrix obtained by multiplying every element of a matrix A by a scalar λ is called the multiple of A by λ and its denoted by λ A i.e.

If $A=[a_{ij}]\Rightarrow \lambda A=\left[\lambda a_{ij}\right]$

For Example:

If $A=\begin{bmatrix} 1 & 2 & 3 \\ 1 & 6 & 5 \end{bmatrix}\Rightarrow 2A=\begin{bmatrix} 2 & 4 & 6 \\ 2 & 12 & 10 \end{bmatrix}$

Negative of a matrix : The negative of a matrix is denoted by –A. We define –A = (– 1) A.

$$-[a_{ij}]_{m\times n} = [(-1).a_{ij}]_{m\times n}$$

Difference of matrices: If A = $[a_{ij}]$, B = $[b_{ij}]$ are two matrices of the same order, say $m \times n$, then difference A – B is defined as a matrix D = $[d_{ij}]$, where $d_{ij} = a_{ij} - b_{ij}$, for all value of i and j. In other words, D = A – B = A + (–1) B, that is sum of the matrix A and the matrix – B.

Symbolically

$$\boxed{[a_{ij}]_{m\times n} - [b_{ij}]_{m\times n} = [a_{ij}]_{m\times n} + (-1)[b_{ij}]_{m\times n}}$$

Properties of matrix addition

If A = $[a_{ij}]$, B = $[b_{ij}]$ and C = $[c_{ij}]$are three matrices of the same order, say $m \times n$, Then

(i) **Commutative Law**

A+B=B+A

i.e.

$$\boxed{[a_{ij}]_{m\times n} + [b_{ij}]_{m\times n} = [b_{ij}]_{m\times n} + [a_{ij}]_{m\times n}}$$

(ii) **Associative Law**

A+(B+C)=(A+B)+C

i.e.

$$\boxed{\begin{aligned}&[a_{ij}]_{m\times n} + ([b_{ij}]_{m\times n} + [c_{ij}]_{m\times n}) = \\ &([a_{ij}]_{m\times n} + [b_{ij}]_{m\times n}) + [c_{ij}]_{m\times n}\end{aligned}}$$

(iii)Additive identity: Let A = $[a_{ij}]$ be an $m \times n$ matrix and O be an $m \times n$ zero matrix, then A + O = O + A = A.

i.e.

$$\boxed{\begin{aligned}&[a_{ij}]_{m\times n} + [o_{ij}]_{m\times n} \\ &= [o_{ij}]_{m\times n} + [a_{ij}]_{m\times n} = [a_{ij}]_{m\times n}\end{aligned}}$$

Where $[o_{ij}]_{m\times n}$ is null matrix

(iii) **Additive inverse :**Let A = $[a_{ij}]_{m\times n}$ be any matrix, then we have another matrix as – A = $[-a_{ij}]_{m\times n}$ such that A + (– A) = (– A) + A= O. So – A is the additive inverse of A or negative of A.

i.e.

Additive inverse of

$A = [a_{ij}]_{m\times n}$ is $-A = [-a_{ij}]_{m\times n}$

Properties of scalar multiplication of a matrix

Let $A = [a_{ij}]_{m\times n}$, $B = [b_{ij}]_{m\times n}$; $k, l \in R$,then

I. $k(A+B) = kA + kB$

II. $(k+l)A = kA + lA$

Multiplication of matrices: The *product* of two matrices A and B is *defined* if the number of columns of A is equal to the number of rows of B.

Let $A=[a_{ij}]_{m\times n}$, $B=[b_{ij}]_{n\times p}$,Then

$$\boxed{AB=[a_{ij}]_{m\times n}\times[b_{ij}]_{n\times p}=[c_{ij}]_{m\times p}}$$

Where

$$\boxed{c_{ij}=\sum_{j=1}^{n}a_{ij}b_{jk}}$$

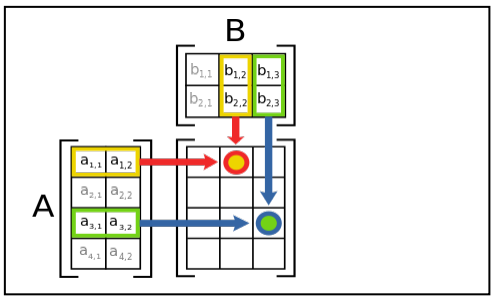

Note: If AB is defined, then BA need not be defined(**Non-commutativity of multiplication of matrices)**

Properties of multiplication of matrices

Let

$$\boxed{A=[a_{ij}]_{m\times n},B=[b_{ij}]_{n\times p},C=[c_{ij}]_{p\times l}}$$

1.The associative law

$$(AB)C=A(BC)$$

2. The distributive law

(i) $\boldsymbol{A\ (B+C) = AB + AC}$,whenever both sides of equality are defined.

(ii) $\boldsymbol{(A+B)\ C = AC + BC}$, whenever both sides of equality are defined.

3. **Multiplicative identity**

$\boldsymbol{IA = AI = A}$.

Remarks:

1. If AB is defined, then BA need not be defined.
2. If A, B are, respectively $m\times n$, $k\times l$ matrices, then both AB and BA are defined if and only if $n=k$ and $l=m$.
3. If AB and BA are both defined, it is not necessary that AB = BA.
4. If the product of two matrices is a zero matrix, it is not necessary that one of the matrices is a zero matrix.
5. For three matrices A, B and C of the same order, if A = B, then AC = BC, but converse is not true.

Trace of a Matrix

The sum of the diagonal elements of a square matrix A is called the trace of A, and is denoted by tr (A).

For Example if $A=\begin{bmatrix}1 & 0 & 0\\ 0 & 2 & 0\\ 0 & 0 & 3\end{bmatrix}$,**then tr(A)=1+2+3=6**

Transpose of a Matrix: LetA be an m x n matrix. Then, the n x m matrix obtained by interchanging the rows and columns of A is called the transpose of A and is denoted by A' or A^T ,for example

Let $A=[a_{ij}]_{m\times n}$,then $A^T = A' = [a_{ji}]_{n\times m}$

for example

if $A=\begin{bmatrix}1 & 2\\ 5 & 3\\ 6 & 7\end{bmatrix}_{3\times 2} \Rightarrow A^T=\begin{bmatrix}1 & 5 & 6\\ 2 & 3 & 7\end{bmatrix}_{2\times 3}$

Properties of the Transpose of a Matrix

I. $(A^T)^T = A$

II. $(A+B)^T = A^T + B^T$

III. $(AB)^T = B^T A^T$

IV. $(kA)^T = k(A)^T$

V. $(A^n)^T = (A^T)^n$

VI. trace(A^T)=trace (A)**[But only True for Square Matrices]**

Conjugate of a Matrix:- A matrix obtained from any given matrix A containing complex number as its elements, or replacing its elements by the corresponding conjugate complex no is called conjugate of A and is denoted by $\overline{A}$

Properties of conjugate

I. $\overline{(\overline{A})} = A$

II. $\overline{(A+B)} = \overline{A} + \overline{B}$

III. $\overline{(\alpha A)} = \overline{\alpha}\,\overline{A}$

Transpose Conjugate of a Matrix:-

The transpose of conjugate of a matrix denoted by A^θ

Properties of Transpose of conjugate:-

I. $(A^\theta)^\theta = A$

II. $(A+B)^\theta = A^\theta + B^\theta$

Special Types of Matrices

Symmetric and Skew Symmetric Matrices:-

A square matrix is A is said to be **symmetric** if

$$\boxed{A^T = A}$$

and **skew symmetric** if

$$\boxed{A^T = -A}$$

Remarks

- Elements of main diagonal of skew symmetric matrices are all zero

  Proof:For Skew symmetric Matrix

  $a_{ij} = -a_{ji}$

  Now for $i = j$

  $a_{ii} = -a_{ii} \Rightarrow 2a_{ii} = 0 \Rightarrow a_{ii} = 0$

- A can be expresses as sum of symmetric and a skew symmetric matrices

$$\boxed{A = \frac{1}{2}\underbrace{\left(A + A^T\right)}_{symmetric} + \frac{1}{2}\underbrace{\left(A - A^T\right)}_{skew\ symmetric}}$$

Unitary Matrix

A matrix is unitary if $A(\overline{A^T}) = I$,where $\overline{A}$ is the complex conjugate of A

Hermition and skew - Harmition Matrix :-

A square matrix is said to be Hermition if A = A^{θ}.
and skew Hermition if A^{θ} = - A .

Orthogonal Matrix : Any square matrix A of order n is said to be orthogonal if $A A^T = A^T A = I_n$.

e.g. $A = \frac{1}{2\sqrt{2}}\begin{bmatrix} 2 & -2 \\ 2 & 2 \end{bmatrix}$,then $A' = \frac{1}{2\sqrt{2}}\begin{bmatrix} 2 & 2 \\ -2 & 2 \end{bmatrix}$,

Then $AA' = \frac{1}{8}\begin{bmatrix} 2 & -2 \\ 2 & 2 \end{bmatrix}\begin{bmatrix} 2 & 2 \\ -2 & 2 \end{bmatrix} = I$

Idempotent Matrix : A square matrix is called idempotent provided it satisfies the relation $A^2 = A$.
e.g.

If $A = \begin{bmatrix} 2 & -2 & -4 \\ -1 & 3 & 4 \\ 1 & -2 & -3 \end{bmatrix}$,then

$$A^2 = \begin{bmatrix} 2 & -2 & -4 \\ -1 & 3 & 4 \\ 1 & -2 & -3 \end{bmatrix}\begin{bmatrix} 2 & -2 & -4 \\ -1 & 3 & 4 \\ 1 & -2 & -3 \end{bmatrix} = A$$

In volutary Matrix :

A matrix such $A^2 = I$.
e.g.

If $A = \begin{bmatrix} -5 & -8 & 0 \\ 3 & 5 & 0 \\ 1 & 2 & -1 \end{bmatrix}$,then

$$A^2 = I$$

Nilpotent Matrix:

A square matrix such that $A^m = O$ where m is positive integer .

e.g $A = \begin{bmatrix} ab & b^2 \\ -a^2 & -ab \end{bmatrix}$,then

$$A^2 = \begin{bmatrix} ab & b^2 \\ -a^2 & -ab \end{bmatrix}\begin{bmatrix} ab & b^2 \\ -a^2 & -ab \end{bmatrix} = \begin{bmatrix} 0 & 0 \\ 0 & 0 \end{bmatrix} = O$$

Invertible Matrices

If $AB = BA = I$ **,then** $B = A^{-1}$

Note

1. A rectangular matrix does not possess inverse matrix, since for products BA and AB to be defined and to be equal, it is necessary that matrices A and B should be square matrices of the same order.
2. If B is the inverse of A, then A is also the inverse of B.
3. (Uniqueness of inverse) Inverse of a square matrix, if it exists, is unique.

Properties of inverse of a matrix and adjoint :-

(i) $(A\,B)^{-1} = B^{-1}\,A^{-1}$

(ii) $(ABC\ \ldots\ldots\ )^{-1} = \ldots\ldots C^{-1}\,B^{-1}\,A^{-1}$

(iii) $(A^T)^{-1} = (A^{-1})^T$

(iv) If A= $diag(a_{11}, a_{22}, \ldots\ldots a_{nn})$,where $a_{ii} \neq 0 \forall i$ then

$A^{-1} = diag(a_{11}^{-1}, a_{22}^{-1}, \ldots\ldots a_{nn}^{-1})$ **[shortcut]**

Elementary Operation (Transformation) of a Matrix

(i) ***The interchange of any two rows or two columns.***
For any two rows $R_i \leftrightarrow R_j$
and for column $C_i \leftrightarrow C_j$.

For example, applying $R_1 \leftrightarrow R_2$ to $A = \begin{bmatrix} 1 & 2 & 1 \\ -1 & \sqrt{3} & 1 \\ 5 & 6 & 7 \end{bmatrix}$, we get $\begin{bmatrix} -1 & \sqrt{3} & 1 \\ 1 & 2 & 1 \\ 5 & 6 & 7 \end{bmatrix}$.

(ii) ***The multiplication of the elements of any row or column by a non zero number.***
where $k \neq 0$
For Rows $R_i \rightarrow kR_i$.
For Columns $C_i \rightarrow kC_i$

For example, applying $C_3 \rightarrow \frac{1}{7}C_3$, to $B = \begin{bmatrix} 1 & 2 & 1 \\ -1 & \sqrt{3} & 1 \end{bmatrix}$, we get $\begin{bmatrix} 1 & 2 & \frac{1}{7} \\ -1 & \sqrt{3} & \frac{1}{7} \end{bmatrix}$

(iii) ***The addition to the elements of any row or column, the corresponding elements of any other row or column multiplied by any non zero number.***

For Rows $R_i \rightarrow R_i + kR_j$.

For columns $C_i \rightarrow C_i + kC_j$.

For example, applying $R_2 \rightarrow R_2 - 2R_1$, to $C = \begin{bmatrix} 1 & 2 \\ 2 & -1 \end{bmatrix}$, we get $\begin{bmatrix} 1 & 2 \\ 0 & -5 \end{bmatrix}$.

Inverse of a matrix by elementary operations
if A is a matrix such that A^{-1} exists, then to find A^{-1} using elementary row operations, write A = IA and apply a sequence of row operation on A = IA till we get, I = BA. The matrix B will be the inverse of A. Similarly, if we wish to find A^{-1} using column operations, then, write A = AI and apply a sequence of column operations on A = AI till we get, I = AB

Matrix polynomial

If $f(x) = a_0 + a_1 x + a_2 x^2 + \ldots\ldots\ldots\ldots a_n x^n$

Then $f(A) = a_0 I + a_1 A + a_2 A^2 + \ldots\ldots\ldots\ldots a_n A^n$ where I is a unit matrix whose order is same as that of square matrix A.

Matrix polynomial

If $f(x) = a_0 + a_1 x + a_2 x^2 + \ldots\ldots\ldots\ldots a_n x^n$

Then $f(A) = a_0 I + a_1 A + a_2 A^2 + \ldots\ldots\ldots\ldots a_n A^n$ where I is a unit matrix whose order is same as that of square matrix A.

Echelon Form of a Matrix and Rank of a Matrix

A non zero matrix A is said to be Echelon Form ,If A satisfies the following conditions :

1. All the non zero rows of A,if any precede the zero rows.
2. The number of zeros preceding the first non zero element in a row is less than the number of such zeros in the succeeding row.
3. The first non zero element in a row is unity

The number of non zero rows of the matrix given in the echelon form is its **RANK**

Cayley–Hamilton theorem

if A is a given $n \times n$ matrix and I_n is the $n \times n$ identity matrix, then the characteristic polynomial of A is defined as

$$p(\lambda) = \det(\lambda I_n - A)$$

The Cayley–Hamilton theorem states that "substituting" the matrix A for λ in this polynomial results in the zero matrix,

$p(A) = 0$.

Section A

The expression $\begin{vmatrix} a_1 & b_1 \\ a_2 & b_2 \end{vmatrix}$ is called a determinant.

Note:Only square matrices have determinants.

DETERMINANTS

Calculation of determinants

Determinant of order 2

If A= $\begin{bmatrix} a_1 & b_1 \\ a_2 & b_2 \end{bmatrix}$,then det (A)= $\begin{vmatrix} a_1 & b_1 \\ a_2 & b_2 \end{vmatrix} = a_1 b_2 - a_2 b_1$

Determinant of order 3

A= $\begin{bmatrix} a_1 & b_1 & c_1 \\ a_2 & b_2 & c_1 \\ a_3 & b_3 & c_3 \end{bmatrix}$,then det (A)=

$$\begin{vmatrix} a_1 & b_1 & c_1 \\ a_2 & b_2 & c_2 \\ a_3 & b_3 & c_3 \end{vmatrix} = a_1 \begin{vmatrix} b_2 & c_2 \\ b_3 & c_3 \end{vmatrix} - b_1 \begin{vmatrix} a_2 & c_2 \\ a_3 & c_3 \end{vmatrix} + c_1 \begin{vmatrix} a_2 & b_2 \\ a_3 & b_3 \end{vmatrix}$$

$= a_1 (b_2 c_3 - b_2 b_3) - b_1 (a_2 c_3 - c_2 a_3) + c_1 (a_2 b_3 - b_2 c_3)$

There are six ways of expanding a determinant of order 3 corresponding to each of three rows (R1, R2 and R3) and three columns (C1, C2 and C3) .

Sarrus' Rule

Sarrus' rule or Sarrus' scheme is a method and a memorization scheme to compute the determinant of a 3×3 matrix

Consider a 3x3 Matrix

A= $\begin{pmatrix} a_{11} & a_{12} & a_{13} \\ a_{21} & a_{22} & a_{23} \\ a_{31} & a_{32} & a_{33} \end{pmatrix}$

then its determinant can be computed by the following scheme:

Write out the first 2 columns of the matrix to the right of the 3rd column, so that you have 5 columns in a row. Then add the products of the diagonals going from top to bottom (solid) and subtract the products of the diagonals going from bottom to top (dashed). This yields:

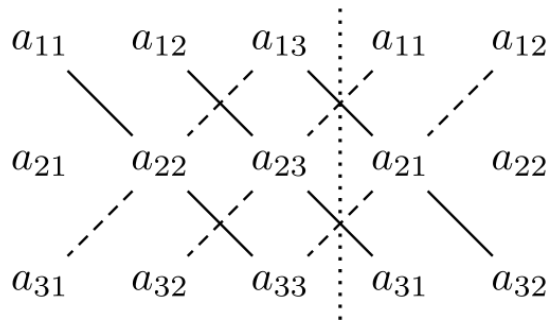

Det(A)= $$a_{11}a_{22}a_{33} + a_{12}a_{23}a_{31} + a_{13}a_{21}a_{32} - a_{31}a_{22}a_{13} - a_{32}a_{23}a_{11} - a_{33}a_{21}a_{12}$$

Minors and cofactors

(i) Minor of an element a_{ij} of the determinant of matrix A is the determinant obtained by deleting i_{th} row and j_{th} column, and it is denoted by M_{ij}.

(ii) Co-factor of an element a_{ij} is given by

$$\boxed{\mathbf{A}_{ij} = (-1)^{i+j}\, \mathbf{M}_{ij}.}$$

(iii) Value of determinant of a matrix A is obtained by the sum of products of elements of a row (or a column) with corresponding co-factors. For example
$|A| = a_{11} A_{11} + a_{12} A_{12} + a_{13} A_{13}$.

(iv) If elements of a row (or column) are multiplied with co-factors of elements of any other row (or column), then their sum is zero. For example,
$a_{11} A_{21} + a_{12} A_{22} + a_{13} A_{23} = 0$.

Adjoint of a Square Matrix

Let A be a square matrix of order n and let C_{ij} ;be cofactor of a_{ij} in A. Then the transpose of the matrix of cofactors of elements of A is called the adjoint of A and is denoted by adj A .
We have
$A\,(\text{adj } A) = |A|\, I_n = (\text{adj } A)\, A$

Invertible Matrices

If A is a square matrix of order *m*, and if there exists another square matrix B of the same order *m*, such that AB = BA = I, then B is called the *inverse* matrix of A and it is denoted by A^{-1}. In that case A is said to be invertible.For example

$A = \begin{bmatrix} 2 & 3 \\ 1 & 2 \end{bmatrix}$ and $B = \begin{bmatrix} 2 & -3 \\ -1 & 2 \end{bmatrix}$ be two matrices.

$$AB = \begin{bmatrix} 2 & 3 \\ 1 & 2 \end{bmatrix}\begin{bmatrix} 2 & -3 \\ -1 & 2 \end{bmatrix}$$

$$= \begin{bmatrix} 4-3 & -6+6 \\ 2-2 & -3+4 \end{bmatrix} = \begin{bmatrix} 1 & 0 \\ 0 & 1 \end{bmatrix} = I$$

$BA = \begin{bmatrix} 1 & 0 \\ 0 & 1 \end{bmatrix} = I$. Thus B is the inverse of A, in other

Note

4. A rectangular matrix does not possess inverse matrix, since for products BA and AB to be defined and to be equal, it is necessary that matrices A and B should be square matrices of the same order.
5. If B is the inverse of A, then A is also the inverse of B.
6. (Uniqueness of inverse) Inverse of a square matrix, if it exists, is unique.
7. If A and B are invertible matrices of the same order, then $(AB)^{-1} = B^{-1} A^{-1}$

<u>inverse of a Matrix</u>

A non - singular square matrix of order n is invertible if there exists a square matrix B of the same order such that $AB = I_n = BA$.

$A^{-1} = B$

$$A^{-1} = \frac{adj(A)}{|A|}$$

<u>properties of inverse of a matrix and adjoint</u> :-

(i) $(A\,B)^{-1} = B^{-1} A^{-1}$

(ii) $(ABC \ldots\ldots\ldots)^{-1} = \ldots\ldots\ldots C^{-1} B^{-1} A^{-1}$

(iii) $(A^T)^{-1} = (A^{-1})^T$

(iv) A is a no n - singular matrix of order n . There $|adj\ A| = |A|^{n-1}$

(v) adj (A B) = adj B . adj A .

(vi) A is are invertible square matrix . There
$adj\ (A^T) = (adj\ A)^T$

(vii) If A is a no n - singular square matrix, there
$adj(adj\ A) = |A|^{n-2} A$.

(viii) If A= $dia(a_{11}, a_{22}, \ldots\ldots\ldots a_{nn})$,where $a_{ii} \neq 0 \forall i$ then $A^{-1} = dia(a_{11}^{-1}, a_{22}^{-1}, \ldots\ldots\ldots a_{nn}^{-1})$ [shortcut]

Section B

Properties of determinants

1. If rows be changed into columns and columns into the rows, the determinant remains unaltered.

2. If any two rows or columns of a determinant are interchanged the resulting determinant is the negative of the original determinant.

3. If two rows (or two columns) in a determinant have corresponding entries that are equal, then the value of determinant is zero.

4. If each of the entries in a row (or column) of a determinant is multiplied by K, then the value of the new determinant is K times the value of original determinant

5. If each entry in a row (or column) of a determinant is written as the sum of two or more terms then the determinant can be written as the sum of two more determinants .

6. If to each element of a line (row or column) of a determinant be added the equimultiples of the corresponding elements of one or more parallel lines, the determinant remains unaltered.

$$\begin{vmatrix} a_1 + la_2 + ma_3 & a_2 & a_3 \\ b_1 + lb_2 + mb_3 & b_2 & b_3 \\ c_1 + lc_2 + mc_3 & c_2 & c_3 \end{vmatrix} = \begin{vmatrix} a_1 & a_2 & a_3 \\ a_1 & b_2 & b_3 \\ a_1 & c_2 & c_3 \end{vmatrix}$$

7. If each entry in any cow (or column) of determinant is zero, then the value of determinant equal to zero .

8. If determinant vanishes for X = a, then (X - a) is a factor of D .

9. If all the elements of a determinant above or below the main diagonal consists of zeros, then the value of the determinant is equal to the product of diagonal elements.

Product of two Determinants :-

$$\begin{vmatrix} a_1 & b_1 & c_1 \\ a_2 & b_2 & c_2 \\ a_3 & b_3 & c_3 \end{vmatrix} \begin{vmatrix} \alpha_1 & \beta_1 & \gamma_1 \\ \alpha_2 & \beta_2 & \gamma_2 \\ \alpha_3 & \beta_3 & \gamma_3 \end{vmatrix} = \begin{vmatrix} a_1\alpha_1 + b_1\beta_1 + c_1\gamma_1 & a_1\alpha_2 + b_1\beta_2 + c_1\gamma_2 & a_1\alpha_3 + b_1\beta_3 + c_1\gamma_3 \\ a_2\alpha_1 + b_2\beta_1 + c_2\gamma_1 & a_2\alpha_2 + b_2\beta_2 + c_2\gamma_2 & a_2\alpha_3 + b_2\beta_3 + c_2\gamma_3 \\ a_3\alpha_1 + b_3\beta_1 + c_3\gamma_1 & a_3\alpha_2 + b_3\beta_2 + c_3\gamma_2 & a_3\alpha_3 + b_3\beta_3 + c_3\gamma_3 \end{vmatrix}$$

Differentiation of a determinant

If $\Delta(x)=\begin{vmatrix} a_1(x) & b_1(x) \\ a_2(x) & b_2(x) \end{vmatrix}$,then $\Delta'(x)=\begin{vmatrix} a_1'(x) & b_1'(x) \\ a_2(x) & b_2(x) \end{vmatrix}+\begin{vmatrix} a_1(x) & b_1(x) \\ a_2'(x) & b_2'(x) \end{vmatrix}$

<u>Summation of Determinants</u> :-

Let $\Delta_r=\begin{vmatrix} f(r) & a & l \\ g(r) & b & m \\ h(r) & c & n \end{vmatrix}$

then

$$\sum_{r=1}^{n}\Delta_r=\begin{vmatrix} \sum_{r=1}^{n} f(r) & a & l \\ \sum_{r=1}^{n} g(r) & b & m \\ \sum_{r=1}^{n} h(r) & c & n \end{vmatrix}$$

<u>Integration of Determinants</u>

If $\Delta(x)=\begin{vmatrix} f(x) & a & l \\ g(x) & b & m \\ h(x) & c & n \end{vmatrix}$

then

$$\int_A^B \Delta(x)=\begin{vmatrix} \int_A^B f(x) & a & l \\ \int_A^B g(x) & b & m \\ \int_A^B h(x) & c & n \end{vmatrix}$$

<u>Section C</u>

Application of determinants and matrices

<u>**Solution of system of linear equations using inverse of a matrix**</u>

Consistent system A system of equations is said to be *consistent* if its solution (one

or more) exists.
Inconsistent system A system of equations is said to be *inconsistent* if its solution does not exist.

<u>System of Simultaneous Linear Equations</u> :-

$a_{11} x_1 + a_{12} x_2 + ... + a_{1n} x_n = b_1$

$a_{21} x_1 + a_{22} x_2 + ... + a_{2n} x_n = b_2$

$\vdots$

$\vdots$

$a_{n1} x_1 + a_{n2} x_2 + ... + a_{nn} x_n = b_n$

$$\begin{bmatrix} a_{11} & a_{12} & \cdots\cdots & a_{14} \\ a_{21} & a_{22} & \cdots\cdots & a_{24} \\ \vdots & & & \vdots \\ 1 & & & . \\ a_{n1} & a_{n2} & \cdots\cdots & a_{nn} \end{bmatrix}_{nxn} \begin{bmatrix} x_1 \\ x_2 \\ \vdots \\ \vdots \\ x_n \end{bmatrix}_{nx1} = \begin{bmatrix} b_1 \\ b_2 \\ \vdots \\ \vdots \\ b_n \end{bmatrix}_{nx1}$$

$AX = B$
$X = A^{-1} B$

(i) If A is non singular, the system of equation AX = B has a unique solution given by $X = A^{-1} B$.

(ii) If A is singular and (adj A) B = O, there system of equation given by AX = B is consistent with. Infinitely many solutions.

(iii) If A is a singular matrix, and (adj A) . B $\neq$ O,

then the system of equation given by AX = B is inconsistent

<u>**Cramer's Rule**</u>

Consider the linear system $\begin{cases} ax + by &= e \\ cx + dy &= f \end{cases}$

which in matrix format is $\begin{bmatrix} a & b \\ c & d \end{bmatrix} \begin{bmatrix} x \\ y \end{bmatrix} = \begin{bmatrix} e \\ f \end{bmatrix}$.

Assume $ad - bc$ nonzero. Then, x and y can be found with Cramer's rule as

$$x = \begin{vmatrix} e & b \\ f & d \end{vmatrix} \Big/ \begin{vmatrix} a & b \\ c & d \end{vmatrix} = \frac{ed - bf}{ad - bc}$$

and

$$y = \begin{vmatrix} a & e \\ c & f \end{vmatrix} \Big/ \begin{vmatrix} a & b \\ c & d \end{vmatrix} = \frac{af - ec}{ad - bc}.$$

The rules for 3×3 are similar. Given $\begin{cases} ax + by + cz & = j \\ dx + ey + fz & = k \\ gx + hy + iz & = l \end{cases}$

which in matrix format is $\begin{bmatrix} a & b & c \\ d & e & f \\ g & h & i \end{bmatrix} \begin{bmatrix} x \\ y \\ z \end{bmatrix} = \begin{bmatrix} j \\ k \\ l \end{bmatrix}.$

Then the values of x, y and z can be found as follows:

$$x = \frac{\begin{vmatrix} j & b & c \\ k & e & f \\ l & h & i \end{vmatrix}}{\begin{vmatrix} a & b & c \\ d & e & f \\ g & h & i \end{vmatrix}}, \quad y = \frac{\begin{vmatrix} a & j & c \\ d & k & f \\ g & l & i \end{vmatrix}}{\begin{vmatrix} a & b & c \\ d & e & f \\ g & h & i \end{vmatrix}}, \text{ and } z = \frac{\begin{vmatrix} a & b & j \\ d & e & k \\ g & h & l \end{vmatrix}}{\begin{vmatrix} a & b & c \\ d & e & f \\ g & h & i \end{vmatrix}}.$$

Area of a triangle

Area of a triangle with vertices (x_1, y_1), (x_2, y_2) and (x_3, y_3) is given by

$$\frac{1}{2}\begin{vmatrix} a_1 & b_1 & c_1 \\ a_2 & b_2 & c_1 \\ a_3 & b_3 & c_3 \end{vmatrix}$$

WORKSHEET-CBSE

Q1 Construct a 2 × 2 matrix whose elements are given by

$a_{ij} = \sin([i^{2017} + j^{2017}]\pi)$

Where [.] denotes the greatest interger function.

Ans: $\begin{bmatrix} 0 & 0 \\ 0 & 0 \end{bmatrix}$

Q2 Construct a matrix A = $[a_{ij}]_{2\times 2}$ whose elements a_{ij} are given by $a_{ij} = e^{2ix}\sin jx$

[Exampler problem Example 1]

Ans: $\begin{bmatrix} e^{2x}\sin x & e^{2x}\sin 2x \\ e^{4x}\sin x & e^{4x}\sin 2x \end{bmatrix}$

Q3 The no. of all possible metrics of order 3 × 3 with each entry 0 or 1 is?

[NCERT- Ex 3.1 Q10]

Ans:-512

Q4 For what values of x and y

$$\begin{bmatrix} 3x+7 & 5 \\ y+1 & 2-3x \end{bmatrix} = \begin{bmatrix} 0 & y-2 \\ 8 & 4 \end{bmatrix}$$

[NCERT- Ex 3.1 Q9]

Ans:- Not possible to find

Q5 Find the additive inverse and multiplicative identity of $A=\begin{bmatrix}1 & 3\\ 4 & -6\end{bmatrix}$

Ans: $\begin{bmatrix}-1 & -3\\ -4 & 6\end{bmatrix};\begin{bmatrix}1 & 0\\ 0 & 1\end{bmatrix}$

Q6 If $A=\begin{bmatrix}\cos\alpha & -\sin\alpha\\ \sin\alpha & \cos\alpha\end{bmatrix}$ and $A+A^T=I$ .Find α

[NCERT- Ex 3.3 Q12]

Ans:- $\alpha=2n\pi\pm\frac{\pi}{3}$

Q7 If A and B are symmetric matrices, prove that $AB-BA$ is a skew symmetric matrix.

[NCERT- Ex 3.3 Q11]

Q8 If A is square matrix such that $A^2 = A$, then $(I + A)^3 - 7A$ is equal to?

[NCERT- Ex 3.3 Q11] **Ans:I**

Q9 If $A=\begin{bmatrix}1 & -2 & 3\\ -4 & 2 & 5\end{bmatrix}, B=\begin{bmatrix}2 & 3\\ 4 & 5\\ 2 & 1\end{bmatrix}$,

then find AB,BA,show that **AB≠BA**

Q10 Find X and Y if $X+Y=\begin{bmatrix}7 & 0\\ 2 & 5\end{bmatrix}; X-Y=\begin{bmatrix}3 & 0\\ 0 & 3\end{bmatrix}$

[NCERT- Ex 3.2 Q7] **Ans:** $X=\begin{bmatrix}5 & 0\\ 1 & 4\end{bmatrix};Y=\begin{bmatrix}2 & 0\\ 1 & 1\end{bmatrix}$

Q11 If $A=\begin{bmatrix}2 & 3\\ -1 & 2\end{bmatrix}$,then show that $A^2-4A+7I=O$,Using the result find A^3, A^{-1}

Ans=$\begin{bmatrix}-10 & 27\\ -9 & -10\end{bmatrix};\frac{1}{7}\begin{bmatrix}2 & -3\\ 1 & 2\end{bmatrix}$

Q12 If $F(x)=\begin{bmatrix}\cos x & -\sin x & 0\\ \sin x & \cos x & 0\\ 0 & 0 & 1\end{bmatrix}$,show that $F(x).F(y)=f(x+y)$

[NCERT- Ex 3.2 Q13] [V.IMPORTANT]

Q13 If A=$\begin{bmatrix}0 & -\tan\frac{\alpha}{2}\\ \tan\frac{\alpha}{2} & 0\end{bmatrix}$ and I is the identity matrix of order 2,show that

(I+A)=(I-A)$\begin{bmatrix}\cos\alpha & -\sin\alpha\\ \sin\alpha & \cos\alpha\end{bmatrix}$

[NCERT- Ex 3.2 Q18] [V.IMPORTANT]

Q14 A trust fund has Rs 30,000 that must be invested in two different types of bonds. The first bond pays 5% interest per year, and the second bond pays 7% interest per year. Using matrix multiplication, determine how to divide Rs 30,000 among the two types of bonds. If the trust fund must obtain an annual total interest of Rs 1800

[NCERT- Ex 3.2 Q19]

Ans :15000

Q15 If $A=\begin{bmatrix}3 & -4\\ 1 & -1\end{bmatrix}$,then prove that

$A^n=\begin{bmatrix}1+2n & -4n\\ n & 1-2n\end{bmatrix}, n\in N$

[NCERT- Misc Ex Q3]

Q16 Express the following matrices as the sum of a symmetric and a skew symmetric matrix:

$A=\begin{bmatrix}3 & 3 & -1\\ -2 & -2 & 1\\ -4 & -5 & 2\end{bmatrix}$

[NCERT- Ex 3.3 Q10]

Ans : $\frac{1}{2}\begin{bmatrix} 6 & 1 & -5 \\ 1 & -4 & -4 \\ -5 & -4 & 4 \end{bmatrix} + \frac{1}{2}\begin{bmatrix} 0 & 5 & 3 \\ -5 & 0 & 6 \\ 5 & -6 & 0 \end{bmatrix}$

Q17 Obtain the inverse of the following matrix using elementary operations

$$\begin{bmatrix} 1 & 3 & -2 \\ -3 & 0 & -5 \\ 2 & 5 & 0 \end{bmatrix}$$

[NCERT- Ex 3.4 Q16]

Ans : $A^{-1} = \begin{bmatrix} 1 & -\frac{2}{5} & -\frac{3}{5} \\ -\frac{2}{5} & \frac{4}{25} & \frac{11}{25} \\ -\frac{3}{5} & \frac{1}{25} & \frac{9}{25} \end{bmatrix}$

Q18 Find P^{-1}, if it exists, given $P = \begin{bmatrix} 6 & -3 \\ -2 & 1 \end{bmatrix}$

Ans: P^{-1} does not exist

Q19 Three schools A, B and C organized a fare for collecting funds for helping the rehabilitation of flood victims. They sold hand made fans, mats and plates from recycled material at a cost of Rs 25, Rs 100 and Rs 50 each. The number of articles sold are given below :

School/Articles	**A**	**B**	**C**
Hand fans	40	25	35
Mats	50	40	50
Plates	20	30	40

Find the funds collected by each school separately by selling the above articles. Also find the total funds collected for the purpose. Write one value generated by the above situation.

Ans : Rs 21,000

Q20 A is a square matrix of order 3 and |A|=7 then |adj(A)| is ?

Ans :49

CBSE -2010

Q21 IfAis a 3 × 3 matrix and |3A|= k|A|, then write the value of k.

Ans:27

Q22 If the co-ordinates of the vertices of an equilateral triangle with sides of length 'a' are $(x_1, y_1), (x_2, y_2), (x_3, y_3)$,then $\begin{vmatrix} x_1 & y_1 & 1 \\ x_2 & y_2 & 1 \\ x_3 & y_3 & 1 \end{vmatrix}^2 = \frac{3a^4}{4}$

[Exemplar Problem Q11]

Q23 The management committee of a residential colony decided to award some of its members (say x) for honesty, some (say y) for helping others and some other (say z) for supervising the workers to keep the colony neat and clean. The sum of all the awardees is 12. Three times the sum of awardees for cooperation and supervision added to two times the number of awardees for honesty is 33. If the sum of the number of awardees for honesty and supervision is twice the number of awardees for helping others, using matrix method, find the number of awardees of each category. Apart from these value, namely, honesty, cooperation and supervision, suggest one more value which the management of the colony must include for awards. **[CBSE 2013]**

Ans: $x = 3, y = 4, z = 5$

Q24 Solve the following system of equations by matrix method

$3x - 2y + 3z = 8$
$2x + y - z = 1$
$4x - 3y + 2z = 4$

Q25 The sum of three numbers is 6. If we multiply third number by 3 and add second number to it, we get 11. By adding first and third numbers, we get double of the second number. Represent it algebraically and find the numbers using matrix method.

Q26 The cost of 4 kg onion, 3 kg wheat and 2 kg rice is Rs 60. The cost of 2 kg onion, 4 kg wheat and 6 kg rice is Rs 90. The cost of 6 kg onion 2 kg wheat and 3 kg rice is Rs 70. Find cost of each item per kg by matrix method.

Q27 Solve the system of equations by cramer's rule [CBSE-1993]

$2x - y = 17; 3x + 5y = 6$

Q28 Find values of k if area of triangle is 4 sq. units and vertices are

$(k, 0), (4, 0), (0, 2)$

Q29 Find equation of line joining (3, 1) and (9, 3) using determinants.

"Secret of getting ahead is getting started"

Worksheet Objective

Q1 For a 2×2 matrix whose elements are given by

$a_{ij} = \sin([i^{2019} + j^{2019}]\pi)$

Where [.] denotes the greatest interger function,what is the value of a_{22}

a) 1

b) 2

c) 0

d) None of these

Q2 If $A=\begin{bmatrix} 2 & 3 \\ -1 & 2 \end{bmatrix}$,then which of the following is true

a) $A^2+4A+7I=O$

b) $A^2-4A-7I=O$

c) $A^2-4A+I=O$

d) $A^2-4A+7I=O$

Q3 If $A=\begin{bmatrix} \cos\theta & \sin\theta \\ -\sin\theta & \cos\theta \end{bmatrix}$,then $\lim_{n\to\infty}\frac{A^n}{n}$ is ,where θ∈R

a) Zero matrix

b) An identity matrix

c) $\begin{bmatrix} 0 & 1 \\ 0 & -1 \end{bmatrix}$

d) $\begin{bmatrix} 0 & 1 \\ -1 & 0 \end{bmatrix}$

Q4 If A=$\begin{bmatrix} 2 & 1 \\ -4 & -2 \end{bmatrix}$,then $I+2A+3A^2.....+\infty$ is equal to

a) $\begin{bmatrix} 4 & 1 \\ -4 & 0 \end{bmatrix}$

b) $\begin{bmatrix} 3 & 1 \\ -4 & -1 \end{bmatrix}$

c) $\begin{bmatrix} 5 & 2 \\ -8 & -3 \end{bmatrix}$

d) $\begin{bmatrix} 5 & 2 \\ -3 & -8 \end{bmatrix}$

Q5 If A & B are two matrices such that AB=B and BA=A,then $A^2 + B^2 =$

a)2AB

b)2BA

c)A+B

d)AB

Q6 If A=$\begin{bmatrix} 1 & 0 \\ 1/2 & 1 \end{bmatrix}$,then A^{50} is

a) $\begin{bmatrix} 1 & 0 \\ 0 & 50 \end{bmatrix}$

b) $\begin{bmatrix} 1 & 0 \\ 25 & 1 \end{bmatrix}$

c) $\begin{bmatrix} 1 & 25 \\ 0 & 1 \end{bmatrix}$

d) none of these

Q7 The trace of the matrix $\begin{bmatrix} -5 & 3 & 2 \\ 3 & 2 & -5 \\ 4 & -1 & -3 \end{bmatrix}$ is

a) -3

b) -6

c) 1

d) none of these

Q8 If A is a skew symmytric matrix ,then trace of A is

a) 1

b) -1

c) 0

d) none of these

Q9 If A= $\begin{bmatrix} \cos x & \sin x \\ -\sin x & \cos x \end{bmatrix}$ and AadjA=K $\begin{bmatrix} 1 & 0 \\ 0 & 1 \end{bmatrix}$ then the value of K is

a) sinxcosx

b) 1

c) 2

d) 3

Q10 If A= $\begin{bmatrix} 5 & 2 \\ 3 & 1 \end{bmatrix}$,then A^{-1}

a) $\begin{bmatrix} 1 & -2 \\ -3 & 5 \end{bmatrix}$

b) $\begin{bmatrix} -1 & 2 \\ 3 & -5 \end{bmatrix}$

c) $\begin{bmatrix} -1 & -2 \\ -3 & -5 \end{bmatrix}$

d) $\begin{bmatrix} 1 & 2 \\ 3 & 5 \end{bmatrix}$

Q11 If A ,B are symmetric matrices of same order then AB-BA is

a) symmetric

b) skew- symmetric

c)null matrix

d)unit matrix

Q12 A is a square matrix of order 3 and |A|=7 then |adj(A)| is

a) 42

b) 49

c) 7

d) 5

Q13 IfAis a 3 × 3 matrix and |3A|= k|A|, then write the value of k.

a) 3

b) 9

c) 27

d) 81

Q14 If A is the identity matrix of order 3,then its inverse (A^{-1}) **[NDA 2019-I]**

a) is equal to null matrix

b) is equal to A

c) is equal to 3A

d) does not exist

Q15 A is a square matrix of order 3 such that its determinant is 4.What is the determinant of its transpose.

a) 64

b) 36

c) 32

d) 4

Q16 If A is square matrix of order n>1,then which one of the following is correct.

a) det(-A)=det(A)

b) det(-A)=$(-1)^n$ det(A)

c) det(-A)=-det(A)

d) det(-A)=n det(A)

Let A and B be (3X3) matrices with detA=4 and detB=3

Q17 What is det(2AB) equal to

a) 96

b) 72

c) 48

d) 36

Q18 What is det($3AB^{-1}$) equal to?

a) 12

b) 18

c) 36

d) 48

Q19 If $B = \begin{bmatrix} 3 & 2 & 0 \\ 2 & 4 & 0 \\ 1 & 1 & 0 \end{bmatrix}$,then what is adjoint of B

a) $\begin{bmatrix} 0 & 0 & 0 \\ 0 & 0 & 0 \\ -2 & -1 & 8 \end{bmatrix}$

b) $\begin{bmatrix} 0 & 0 & -2 \\ 0 & 0 & -1 \\ 0 & 0 & 8 \end{bmatrix}$

c) $\begin{bmatrix} 0 & 0 & 2 \\ 0 & 0 & 1 \\ 0 & 0 & 0 \end{bmatrix}$

d) It does not exist

Q20 If $A = \begin{bmatrix} 0 & 1 \\ 1 & 0 \end{bmatrix}$,then the matrix A is a /an

a) singular Matrix

b) Involutory Matrix

c) Nilpotent Matrix

d) Idempotent Matrix

Q21 What is the inverse of the matrix

$$A = \begin{bmatrix} \cos\theta & \sin\theta & 0 \\ -\sin\theta & \cos\theta & 0 \\ 0 & 0 & 1 \end{bmatrix}$$

a) $\begin{bmatrix} \cos\theta & -\sin\theta & 0 \\ \sin\theta & \cos\theta & 0 \\ 0 & 0 & 1 \end{bmatrix}$

b) $\begin{bmatrix} \cos\theta & 0 & -\sin\theta \\ 0 & 1 & 0 \\ -\sin\theta & 0 & \cos\theta \end{bmatrix}$

c) $\begin{bmatrix} 1 & 0 & 0 \\ 0 & \cos\theta & -\sin\theta \\ 0 & -\sin\theta & \cos\theta \end{bmatrix}$

d) $\begin{bmatrix} \cos\theta & \sin\theta & 0 \\ -\sin\theta & \cos\theta & 0 \\ 0 & 0 & 1 \end{bmatrix}$

Q22 If A is a 2X3 matrix and AB is a 2X5 matrix,then B must be a

a) 3X5 matrix
b) 5X3 matrix
c) 3X2 matrix
d) 5X2 matrix

Q23 If $A=\begin{bmatrix}1 & 2\\ 2 & 3\end{bmatrix}; A^2-kA-I_2=O$,then what is the value of k?

a) 4
b) -4
c) 8
d) -8

Q24 A square matrix A is called orthogonal if , Where A' is the transpose of A.

a) $A = A^2$
b) $A' = A^{-1}$
c) $A = A^{-1}$
d) $A = A'$

Q25 For a square matrix A, which of the following properties hold?
1. $(A^{-1})^{-1} = A$
2. $\det(A^{-1}) = 1/\det A$
3. $(\lambda A)^{-1} = \lambda A^{-1}$ where λ is a scalar
Select the correct answer using the code given below:
a)1 and 2 only
b) 2 and 3 only
c)1 and 3 only
d) 1, 2 and 3

Q26 Which one of the following factors does the expansions of the determinant $\begin{vmatrix} x & y & 3 \\ x^2 & 5y^3 & 9 \\ x^3 & 10y^5 & 27 \end{vmatrix}$ contain?
a) x – 3
b) x –y
c) y – 3
d) x – 3y

Q27 If A and B are two invertible square matrices of same order, then what is $(AB)^{-1}$ equal to?
a) $B^{-1}A^{-1}$
b) $A^{-1}B^{-1}$
c) $B^{-1}A$
d) $A^{-1}B$

Q28 What should be the value of x so that the matrix $\begin{bmatrix} 2 & 4 \\ -8 & x \end{bmatrix}$ does not have an inverse?

a) 16

b) –16

c) 8

d) –8

Q29 The system of equation

$2x + y - 3z = 5$

$3x - 2y + 2z = 5$ and

$5x - 3y - z = 16$

a) is inconsistent

b)is consistent, with a unique solution

c)is consistent, with infinitely many solutions

d)has its solution lying along x-axis in threedimensional space

Q30 Consider the following in respect of matrices A, B and C of same order:

1. $(A + B + C)' = A' + B' + C'$
2. $(AB)' = A'B'$
3. $(ABC)' = C'B'A'$

Where A' is the transpose of the matrix A. Which of the above are correct?

a) 1 and 2 only

b) 2 and 3 only

c) 1 and 3 only

d) 1, 2 and 3

Q31 Let matrix B be the adjoint of a square matrix A, λ be the identity matrix of same order as A. If

$k(\neq 0)$ is the determinant of the matrix A, then what is AB equal to?

a) λ

b) $k\lambda$

c) $k^2\lambda$

d) $(1/k)\lambda$

Q32 Consider the following in respect of matrices A and B of same order:

1. $A^2 - B^2 = (A + B)(A - B)$

2. $(A - I)(I + A) = 0 \Leftrightarrow A^2 = I$

Where I is the identity matrix and O is the null matrix. Which of the above is/are correct?

a) 1 only

b) 2 only

c) Both 1 and 2

d) Neither 1 nor 2

1	C	11	B	21	A	31	B
2	D	12	B	22	A	32	B
3	A	13	C	23	A	33	
4	C	14	B	24	B	34	
5	C	15	D	25	A	35	
6	B	16	B	26	A	36	
7	B	17	A	27	A	37	
8	C	18	C	28	B	38	
9	B	19	A	29	B	39	

10	B	20	B	30	C	40	

Previous Year(JEE MAINS)MATRICES

MCQ-Single Correct

1. If A = $\begin{bmatrix} 2 & -3 \\ -4 & 1 \end{bmatrix}$, then $adj(3A^2+12A)$ is equal to:

(1) $\begin{bmatrix} 72 & -84 \\ -63 & 51 \end{bmatrix}$

(2) $\begin{bmatrix} 51 & 63 \\ 84 & 72 \end{bmatrix}$

(3) $\begin{bmatrix} 51 & 84 \\ 63 & 72 \end{bmatrix}$

(4) $\begin{bmatrix} 72 & -63 \\ -84 & 51 \end{bmatrix}$ **[2017]**

2. If A = $\begin{bmatrix} 5a & -b \\ 3 & 2 \end{bmatrix}$ and $A\,adj\,A = AA^T$, then 5a +b is equal to :

(1) 5 (2) 4

(3) 13 (4) -1 **[2016]**

3. If A = $\begin{bmatrix} 1 & 2 & 2 \\ 2 & 1 & -2 \\ a & 2 & b \end{bmatrix}$ is a matrix satisfying the equation $AA^T = 9I$, where I is 3×3 identity matrix, then ordered pair (a,b) is equal to :

(1) (-2,1) (2) (2,1)

(3) (-2,-1) 4) (2,-1) **[2015]**

4. If A is a 3×3 non-singular matrix such that AA'=A'A and $B = A^{-1}A$, then BB' equals

(1) I + B (2) I

(3) B^{-1} (4) $\left(B^{-1}\right)'$ **[2014]**

5. If P = $\begin{bmatrix} 1 & \alpha & 3 \\ 1 & 3 & 3 \\ 2 & 4 & 4 \end{bmatrix}$ is the adjoint of a 3×3 matrix A and |A|=4, then α is equal to

(1) 11 (2) 5

(3) 0 (4) 4 **[2013]**

6. Let A = $\begin{pmatrix} 1 & 0 & 0 \\ 2 & 1 & 0 \\ 3 & 2 & 1 \end{pmatrix}$. If u_1 and u_2 are column matrices such that $Au_1 = \begin{pmatrix} 1 \\ 0 \\ 0 \end{pmatrix}$ and $Au_2 = \begin{pmatrix} 0 \\ 1 \\ 0 \end{pmatrix}$, then $u_1 + u_2$ is equal to

(1) $\begin{pmatrix} -1 \\ -1 \\ 0 \end{pmatrix}$

(2) $\begin{pmatrix} 1 \\ -1 \\ -1 \end{pmatrix}$

(3) $\begin{pmatrix} -1 \\ 1 \\ 0 \end{pmatrix}$

(4) $\begin{pmatrix} -1 \\ 1 \\ -1 \end{pmatrix}$ **[2012]**

7. If $\omega \neq 1$ is the complex cube root of unity and matrix H = $\begin{bmatrix} \omega & 0 \\ 0 & \omega \end{bmatrix}$, then H^{70} is equal to

(1) H^2 (2) H

(3) 0 (4) -H **[2011]**

8. The number of 3×3 non-singular matrices, with four entries as 1 and all other entries as 0, is

(1) 5 (2) 6

(3) at least 7 (4) less than 4 **[2010]**

9. Let A be a square matrix all of whose entries are integers. Then which one of the following is true?

(1) If detA = ±1 , then A^{-1} exists but all its entries are not necessarily integers

(2) If detA = ±1 , then A^{-1} exists and all its entries are non-integers

(3) If detA = ±1 , then A^{-1} exists and all its entries are integers

(4) If detA = ±1 , then A^{-1} need not exist

[2008]

10. Let A = $\begin{bmatrix} 5 & 5\alpha & \alpha \\ 0 & \alpha & 5\alpha \\ 0 & 0 & 5 \end{bmatrix}$. If | A^2 | = 25, then $|\alpha|$ equals

(1) 5^2 (2) 1

(3) 1/5 (4) 5 **[2007]**

11. If A and B are square matrices of size $n \times n$ such that $A^2 - B^2 = (A-B)(A+B)$, then which of the following will be always true?

(1) A = B

(2) AB = BA

(3) Either of A or B is a zero matrix

(4) Either of A or B is an identity matrix

[2006]

12. Let A = $\begin{pmatrix} 1 & 2 \\ 3 & 4 \end{pmatrix}$ and B = $\begin{pmatrix} a & 0 \\ 0 & b \end{pmatrix}$, a , b $\in$ N. Then

(1) there cannot exist any B such that AB = BA

(2) there exist more than one but finite number of B's such that AB = BA

(3) there exists exactly one B such that AB = BA

(4) there exist infinitely many B's such that AB = BA **[2006]**

13. If $A^2 - A + I = 0$, then the inverse of A is

(1) A + I (2) A

(3) A – I (4) I – A

14. If A = $\begin{bmatrix} 1 & 0 \\ 1 & 1 \end{bmatrix}$ and I = $\begin{bmatrix} 1 & 0 \\ 0 & 1 \end{bmatrix}$, then which one of the following holds for all $n \geq 1$, by the principle of mathematical induction

(1) $A^n = nA - (n-1)I$

(2) $A^n = 2^{n-1}A - (n-1)I$

(3) $A^n = nA + (n-1)I$

(4) $A^n = 2^{n-1}A + (n-1)I$ **[2005]**

15. Let $A = \begin{pmatrix} 0 & 0 & -1 \\ 0 & -1 & 0 \\ -1 & 0 & 0 \end{pmatrix}$. The only correct statement about the matrix A is

(1) A is a zero matrix (2) $A^2 = I$

(3) A^{-1} does not exist (4) A = (-1)I, where I is a unit matrix

[2004]

16. Let $A=\begin{pmatrix}1 & -1 & 1\\ 2 & 1 & -3\\ 1 & 1 & 1\end{pmatrix}$(10) and $B=\begin{pmatrix}4 & 2 & 2\\ -5 & 0 & \alpha\\ 1 & -2 & 3\end{pmatrix}$. If B is the inverse of matrix A , then α is

(1) -2 (2) 5

(3) 2 (4) -1 **[2004]**

17. If $A=\begin{bmatrix}a & b\\ b & a\end{bmatrix}$ and $A^2=\begin{bmatrix}\alpha & \beta\\ \beta & \alpha\end{bmatrix}$, then

(1) $\alpha=a^2+b^2$, $\beta=ab$ (2) $\alpha=a^2+b^2$, $\beta=2ab$

(3) $\alpha=a^2+b^2$, $\beta=a^2-b^2$ (4) $\alpha=2ab$ $\beta=a^2+b^2$ **[2003]**

Assertion-Reason type

1. Consider the following relation **R** on the set of real square matrices of order 3. **[2011]**

R = {(A,B)|A = $P^{-1}BP$ for some invertible matrix P}.

Statement – I : R is an equivalence relation.

Statement-II : For any two invertible 3×3 matrices M and N, $(MN)^{-1}=N^{-1}M^{-1}$.

(1) Statement-I is True; Statement-II is true; Statement-II is **not** a correct explaination of Statement-I.

(2) Statement-I is True; Statement-II is False.

(3) Statement-I is False; Statement-II is true

(4) Statement-I is True; Statement-II is true; Statement-II is a **correct** explaination of Statement-I.

2. Let A be a 2×2 matrix with non-zero entries and let $A^2=I$, where I is 2×2 identity matrix. Define Tr(A) = sum of diagonal elements of A and |A| = determinant of matrix A.**[2010]**

Statement-I : Tr(A) = 0

Statement-II : |A|=1

(1) Statement-I is True; Statement-II is true; Statement-II is **not** a correct explaination of Statement-I.

(2) Statement-I is True; Statement-II is False.

(3) Statement-I is False; Statement-II is true

(4) Statement-I is True; Statement-II is true; Statement-II is a **correct** explaination of Statement-I.

3. Let A be a 2×2 matrix **[2009]**

Statement-I : adj(adj A) = A

Statement-II : |adj A| = |A|

(1) Statement-I is True; Statement-II is true; Statement-II is **not** a correct explaination of Statement-I.

(2) Statement-I is True; Statement-II is False.

(3) Statement-I is False; Statement-II is true

(4) Statement-I is True; Statement-II is true; Statement-II is a **correct** explaination of Statement-I.

4. Let A be a 2×2 matrix with real entries. Let I be the 2×2 identity matrix. Denote by tr(A), the sum of diagonal entries of A. Assume that $A^2 = I$ **[2008]**

Statement-I : If $A \neq I$ and $A \neq -I$, then det A = -1.

Statement-II : If $A \neq I$ and $A \neq -I$, then $tr(A) \neq 0$

(1) Statement-I is True; Statement-II is true; Statement-II is **not** a correct explaination of Statement-I.

(2) Statement-I is True; Statement-II is False.

(3) Statement-I is False; Statement-II is true

(4) Statement-I is True; Statement-II is true; Statement-II is a **correct** explaination of Statement-I.

Q.NO	1	2	3	4	5	6
Ans	2	1	3	2	1	2
Q.NO	7	8	9	10	11	12
Ans	2	3	3	3	2	4
Q.No	13	14	15	16	17	
Ans	4	1	2	2	2	

Assertion reason:

1) 4
2) 2
3) 1
4) 2

Determinants

Exercise2 (For JEE -Mains)DETERMINANTS

Objective:

Q1 If a>0 and discriminant of $ax^2 + 2bx + c$ is –ve then

$$\begin{vmatrix} a & b & ax+b \\ b & c & bx+c \\ ax+b & bx+c & 0 \end{vmatrix} \text{ is}$$

[AIEEE-2002]

a) +ve

b) $(ac-b^2)(ax^2+2bx+c)$

c) –ve

d) 0

Q2 If $a_1, a_2, a_3 \ldots\ldots\ldots\ldots\ldots\ldots, a_n$ are in G.P. then the value of the determinant

$$\begin{vmatrix} \log a_n & \log a_{n+1} & \log a_{n+2} \\ \log a_{n+3} & \log a_{n+4} & \log a_{n+5} \\ \log a_{n+6} & \log a_{n+7} & \log a_{n+8} \end{vmatrix} \text{ is}$$

[AIEEE-2004]

a) 2 b) 1

c) 0 d) -2

Q3 The determinant $\begin{vmatrix} xp+y & x & y \\ yp+z & y & z \\ 0 & xp+y & y \end{vmatrix} = 0$ if

[IIT-1997]

a) x,y,z are in A.P.

b) x,y,z are in G.P.

c) x,y,z are in H.P.

d) xy,yz,zx are in A.P.

Q4 The parameter on which the value of the determinant

$$\begin{vmatrix} 1 & a & a^2 \\ \cos(p-d)x & \cos p\ x & \cos(p+d)x \\ \sin(p-d)x & \sin p\ x & \sin(p+d)x \end{vmatrix}$$

does not depend upon

[IIT-1997]

a) a b) p

c) d d) x

Q5 If $a^2+b^2+c^2=-2$ and

$$f(x)=\begin{vmatrix} 1+a^2x & (1+b^2)x & (1+c^2)x \\ (1+a^2)x & 1+b^2x & (1+c^2)x \\ (1+a^2)x & (1+b^2)x & 1+c^2x \end{vmatrix}$$

Then f(x) is a polynomial of degree

[AIEEE-2005]

a) 0 b) 1

c) 2 d) 3

Q6 If $\begin{vmatrix} x^2+1 & 1 & x+1 \\ 2x^2-1 & 1 & x+2 \\ 3x^2-2 & 1 & x+3 \end{vmatrix} = a_0+a_1x+\ldots\ldots\ldots\ldots$,then a_1 is equal to

a) 1 b) 2

c) 3 d) 0

Q7 If the maximum and the minimum value of the determinant

$\begin{vmatrix} 1+\sin^2 x & \cos^2 x & \sin 2x \\ \sin^2 x & 1+\cos^2 x & \sin 2x \\ \sin^2 x & \cos^2 x & 1+\sin 2x \end{vmatrix}$ are α and β then

a) $\alpha+\beta^{99}=4$

b) $\alpha^3 - \beta^{17} = 26$

c) $(\alpha^{2n} - \beta^{2n})$ is always an even integer for n∈N

d) a triangle can be constructed having its sides as α, β and α-β

Comprehension:

Let A be a square matrix .The transpose matrix of the matrix for the corresponding cofactors of the elements of A is called the adjoint of A ,and is written as adj(A).Then

Q8 If A= $(a_{ij})_{m\times n}$ and $|A| \neq 0$,then (adj A) $^{-1}$=

a) $(a_{ij})_{m\times n}$ b) $\frac{(adj)_{m\times n}}{|A|}$

c)adj(A) d) None of these

Q9 (adj A $^{-1}$)

a) AdjA b) A

c) $|A|^{n-2}A$ d) None of these

Q10 Adj(Adj(A))=

a) $|A|^{n-2}A$ b) A

c) $|A|^{n-1}A$ d) none of these

Q1	Q2	Q3	Q4	Q5
C	C	B	B	C
Q6	Q7	Q8	Q9	Q10
D	A,B,C	D	D	a

Previous Year Questions

Matrices (More than One Correct)

JEE Advanced

2025

1. Let $I=\begin{pmatrix}1 & 0\\ 0 & 1\end{pmatrix}$ and $P=\begin{pmatrix}2 & 0\\ 0 & 3\end{pmatrix}$. Let $Q=\begin{pmatrix}x & y\\ z & 4\end{pmatrix}$ for some non-zero real numbers x,y and z, for which there is a 2×2 matrix R with all entries being non-zero real numbers, such that QR=RP. Then which of the following statements is(are) TRUE?
   (a) The determinant of $Q-2I$ is zero.
   (b) The determinant $Q-6I$ is 12.
   (c) The determinant $Q-3I$ is 15.
   (d) $yz=2$.

2024

1. Let $\mathbb{R}^2$ denote $\mathbb{R}\times\mathbb{R}$. Let $S=\{(a,b,c): a,b,c\in\mathbb{R}$ and $ax^2+2bxy+cy^2>0$ for all $(x,y)\in\mathbb{R}^2-\{(0,0)\}$. Then which of the following statements is(are) TRUE?

(a) $\left(2,\frac{7}{2},6\right)\in S$

(b) If $\left(3,b,\frac{1}{12}\right)\in S$, $|2b|<1$.

(c) For any given $(a,b,c)\in S$, the system of linear equations $ax+by=1, bx+cy=-1$ has a unique solution.

(d) For any given $(a,b,c)\in S$, the system of linear equations $(a+1)x+by=0$, $bx+(c+1)y=0$ has a unique solution.

2023

1. Let $M=(a_{i,j}), i, j \in \{1,2,3\}$, be the 3×3 matrix such that $a_{ij}=1$ if $j+1$ is divisible by i, otherwise $a_{ij}=0$. Then which of the following statements is(are) true?

(a) M is invertible.

(b) There exists a nonzero column matrix $\begin{pmatrix} a_1 \\ a_2 \\ a_3 \end{pmatrix}$ such that $M\begin{pmatrix} a_1 \\ a_2 \\ a_3 \end{pmatrix}=\begin{pmatrix} -a_1 \\ -a_2 \\ -a_3 \end{pmatrix}$.

(c) The set $\{X \in \mathbb{R}^3 : MX=0\} \neq \{0\}$, where $0=\begin{pmatrix} 0 \\ 0 \\ 0 \end{pmatrix}$

(d) The matrix $(M-2I)$ is invertible, where I is the 3×3 identity matrix.

2021

Q1. For any 3×3 matrix M, let $|M|$ denote the determinant of M. Let $E=\begin{bmatrix} 1 & 2 & 3 \\ 2 & 3 & 4 \\ 8 & 13 & 18 \end{bmatrix}$, $P=\begin{bmatrix} 1 & 0 & 0 \\ 0 & 0 & 1 \\ 0 & 1 & 0 \end{bmatrix}$ and $F=\begin{vmatrix} 1 & 3 & 2 \\ 8 & 18 & 13 \\ 2 & 4 & 3 \end{vmatrix}$. If Q is a nonsingular matrix of order 3×3 ,then which of the following statements is(are) TRUE?

(a) $F=PEP$ and $P^2=\begin{bmatrix} 1 & 0 & 0 \\ 0 & 1 & 0 \\ 0 & 0 & 1 \end{bmatrix}$

(b) $|EQ+PFQ^{-1}|=|EQ|+|PFQ^{-1}|$

(c) $|(EF)^3|>|EF|^2$

(d) Sum of the diagonal entries of $P^{-1}EP+F$ is equal to the sum of diagonal entries of $E+P^{-1}FP$

Q2: For any 3×3 matrix M, let $|M|$ denote the determinant of M. Let I be the 3×3 identity matrix.Let E and F be two 3×3 matrices such that $(I-EF)$ is invertible. If $G=(I-EF)^{-1}$, then which of the following statements is(are) TRUE?

(a) $|EF| = |I - FE||FGE|$

(b) $(I - FE)(I + FGE) = I$

(c) $EFG = GEF$

(d) $(I - FE)(I - FGE) = I$

2020

Q1: Let M be a 3×3 invertible matrix with real entries and let I denote the 3×3 identity matrix. If $M^{-1} = adj(adjM)$, then which of the following statements is(are) ALWAYS TRUE?

(a) $M = I$

(b) $\det M = 1$

(c) $M^2 = I$

(d) $(adjM)^2 = I$

2019

Q1: Let $x \in R$ and let, $P = \begin{bmatrix} 1 & 1 & 1 \\ 0 & 2 & 2 \\ 0 & 0 & 3 \end{bmatrix}$, $Q = \begin{bmatrix} 2 & x & x \\ 0 & 4 & 0 \\ x & x & 6 \end{bmatrix}$, $R = PQP^{-1}$,which of the following options is(are) correct?

(a) There exists a real number x such that $PQ = QP$

(b) For $x = 0$, if $R\begin{bmatrix} 1 \\ a \\ b \end{bmatrix} = 6\begin{bmatrix} 1 \\ a \\ b \end{bmatrix}$, then $a + b = 5$

(c) For $x = 1$, there exists a unit vector $\alpha\hat{i} + \beta\hat{j} + \gamma\hat{k}$ for which $R\begin{bmatrix} \alpha \\ \beta \\ \gamma \end{bmatrix} = \begin{bmatrix} 0 \\ 0 \\ 0 \end{bmatrix}$

(d) $\det R = \det\begin{bmatrix} 2 & x & x \\ 0 & 4 & 0 \\ x & x & 5 \end{bmatrix} + 8$, for all $x \in R$.

Q2: $P_1 = I = \begin{bmatrix} 1 & 0 & 0 \\ 0 & 1 & 0 \\ 0 & 0 & 1 \end{bmatrix}$, $P_2 = \begin{bmatrix} 1 & 0 & 0 \\ 0 & 0 & 1 \\ 0 & 1 & 0 \end{bmatrix}$, $P_3 = \begin{bmatrix} 0 & 1 & 0 \\ 1 & 0 & 0 \\ 0 & 0 & 1 \end{bmatrix}$, $P_4 = \begin{bmatrix} 0 & 1 & 0 \\ 0 & 0 & 1 \\ 1 & 0 & 0 \end{bmatrix}$, $P_5 = \begin{bmatrix} 0 & 0 & 1 \\ 1 & 0 & 0 \\ 0 & 1 & 0 \end{bmatrix}$,

$P_6 = \begin{bmatrix} 0 & 0 & 1 \\ 0 & 1 & 0 \\ 1 & 0 & 0 \end{bmatrix}$, and $X = \sum_{k=1}^{6} P_k \begin{bmatrix} 2 & 1 & 3 \\ 1 & 0 & 2 \\ 3 & 2 & 1 \end{bmatrix} P_k^T$ where P_k^T denotes the transpose of the matrix P_k.

Then which of the following option is/are correct?

(a) X is a symmetric matrix.

(b) The sum of diagonal entries of X is 18.

(c) $X - 30I$ is an invertible matrix.

(d) If $X \begin{bmatrix} 1 \\ 1 \\ 1 \end{bmatrix} = \alpha \begin{bmatrix} 1 \\ 1 \\ 1 \end{bmatrix}$, then $\alpha = 30$

Q3: Let $M = \begin{bmatrix} 0 & 1 & a \\ 1 & 2 & 3 \\ 3 & b & 1 \end{bmatrix}$ and $adjM = \begin{bmatrix} -1 & 1 & -1 \\ 8 & -6 & 2 \\ -5 & 3 & -1 \end{bmatrix}$ where a and b are real numbers. Which of the following options is/are correct?

(a) $\det\left(adjM^2\right) = 81$

(b) If $M \begin{bmatrix} \alpha \\ \beta \\ \gamma \end{bmatrix} = \begin{bmatrix} 1 \\ 2 \\ 3 \end{bmatrix}$, then $\alpha - \beta + \gamma = 3$

(c) $\left(adjM\right)^{-1} + adjM^{-1} = -M$

(d) $a + b = 3$

2018

Q1: Let S be the set of all column matrices $\begin{bmatrix} b_1 \\ b_2 \\ b_3 \end{bmatrix}$ such that $b_1, b_2, b_3 \in R$ and the system of equations (in real variables)

$$-x + 2y + 5z = b_1$$

$$2x - 4y + 3z = b_2$$

$$x - 2y + 2z = b_3$$

has at least one solution. Then, which of the following system(s) (in real variables) has(have)at least one solution for each $\begin{bmatrix} b_1 \\ b_2 \\ b_3 \end{bmatrix} \in S$?

(a) $x+2y+3z=b_1,\ 4y+5z=b_2$ and $x+2y+6z=b_3$

(b) $x+y+3z=b_1,\ 5x+2y+6z=b_2$ and $-2x-y-3z=b_3$

(c) $-x+2y-5z=b_1,\ 2x-4y+10z=b_2$ and $x-2y+5z=b_3$

(d) $x+2y+5z=b_1,\ 2x+3z=b_2$ and $x+4y-5z=b_3$

2017

Q1: Which of the following is(are) NOT the square of a 3×3 matrix with real entries?

(a) $\begin{bmatrix} 1 & 0 & 0 \\ 0 & 1 & 0 \\ 0 & 0 & -1 \end{bmatrix}$

(b) $\begin{bmatrix} 1 & 0 & 0 \\ 0 & -1 & 0 \\ 0 & 0 & -1 \end{bmatrix}$

(c) $\begin{bmatrix} -1 & 0 & 0 \\ 0 & -1 & 0 \\ 0 & 0 & -1 \end{bmatrix}$

(d) $\begin{bmatrix} 1 & 0 & 0 \\ 0 & 1 & 0 \\ 0 & 0 & 1 \end{bmatrix}$

2016

Q1: Let a, λ ,m$\in R$. Consider the system of linear equations

$ax+2y=\lambda$

$3x-2y=\mu$

Which of the following statements is(are) correct?

(a) If a=-3, then the system has infinitely many solutions for all values of λ and μ .

(b) If $a\neq -3$, then the system has a unique solution for all values of λ and μ .

(c) If $\lambda+\mu=0$, then the system has infinitely many solutions for a=-3.

(d) If $\lambda+\mu\neq 0$, then the system has no solution for a=-3.

Q2: Let $P=\begin{bmatrix}3 & -1 & -2\\ 2 & 0 & \alpha\\ 3 & -5 & 0\end{bmatrix}$, where $\alpha \in R$. Suppose $Q=\left[q_{ij}\right]$ is a matrix such that $PQ=kl$, where

$k \in R$, where $k \in R$, $k \neq 0$ and I is the identity matrix of order 3.If $q_{23}=-\frac{k}{8}$ and $\det(Q)=\frac{k^2}{2}$, then

(a) $\alpha=0, k=8$

(b) $4\alpha-k+8=0$

(c) $\det\left(Padj\left(Q\right)\right)=2^9$

(d) $\det\left(Qadj\left(P\right)\right)=2^{13}$

2015

Q1: Let X and Y be two arbitrary, 3×3, non-zero, skew-symmetric matrices and Z be an arbitrary 3×3, non-zero, symmetric matrix. Then which of the following matrices is(are) skew symmetric?

(a) $Y^3Z^4-Z^4Y^3$

(b) $X^{44}+Y^{44}$

(c) $X^4Z^3-Z^3X^4$

(d) $X^{23}+Y^{23}$

Q2: Which of the following values of α satisfy the equation

$$\begin{vmatrix}(1+\alpha)^2 & (1+2\alpha)^2 & (1+3\alpha)^2\\ (2+\alpha)^2 & (2+2\alpha)^2 & (2+3\alpha)^2\\ (3+\alpha)^2 & (3+2\alpha)^2 & (3+3\alpha)^2\end{vmatrix}=-648\alpha\,?$$

(a) -4

(b) 9

(c) -9

(d) 4

2014

Q1: Let M be a 2×2 symmetric matrix with integer entries. Then, M is invertible, if

(a) The first column of M is the transpose of the second row of M.
(b) The second row of M is the transpose of the first column of M.
(c) M is a diagonal matrix with non-zero entries in the main diagonal.
(d) The product of entries in the main diagonal of M is not the square of an integer.

Q2: Let M and N be two 3×3 matrices such that $MN=NM$. Furthur, if $M\neq N^2$ and $M^2=N^4$, then

(a) Determinant of $\left(M^2+MN^2\right)$ is 0

(b) There is a 3×3 non-zero matrix U such that $\left(M^2+MN^2\right)U$ is zero matrix

(c) Determinant of $\left(M^2+MN^2\right)\geq1$

(d) For a 3×3 matrix U, if $\left(M^2+MN^2\right)U$ equals the zero matrix, then U is the zero matrix

2013

Q1: Let ω be a complex cube root of unity with $\omega\neq1$ and $P=\left[p_{ij}\right]$ be a $n\times n$ with $p_{ij}=\omega^{i+j}$.Then $P^2\neq0,$ when n=?

(a) 57 (b) 55

(c) 58 (d) 56

Q2: For 3×3 matrices M and N, which of the following statements is(are) NOT correct?

(a) N^TMN is symmetric or skew symmetric, according as M is symmetric or skew-symmetric.
(b) $MN-NM$ is skew symmetric for all symmetric matrices M and N.
(c) MN is symmetric for all symmetric matrices M and N.
(d) $adj(M).adj(N)=adj(MN)$ for all invertible matrices M and N.

2012

Q1: If the adjoint of a 3×3 matrix P is $\begin{bmatrix}1&4&4\\2&1&7\\1&1&3\end{bmatrix}$, then the possible value(s) of the determinant of P is(are)

(a) -2 (b) -1

(c) 1 (d) 2

2011

Q1: Let M and N be two 3×3 non-singular skew symmetric matrices such that $MN=NM$. If P^T denotes the transpose of P, then $M^2N^2\left(M^TN\right)^{-1}\left(MN^{-1}\right)^T$ is equal to

(a) M^2 (b) $-N^2$

(c) $-M^2$ (d) MN

Previous Year Questions

JEE Mains

MCQ (Single Correct Answer)

2026

Q1: Let A,B and C be three 2×2 matrices with real entries such that $B=(I+A)^{-1}$ and $A+C=I$.

If $BC=\begin{bmatrix}1 & -5\\ -1 & 2\end{bmatrix}$ and $CB\begin{bmatrix}x_1\\ x_2\end{bmatrix}=\begin{bmatrix}12\\ -6\end{bmatrix}$, then x_1+x_2 is

(a) 4 (b) 2

(c) 0 (d) -2

Q2: Let $P=\left[p_{ij}\right]$ and $Q=\left[q_{ij}\right]$ be two square of order 3 such that $q_{ij}=2^{(i+j-1)}p_{ij}$ and $\det(Q)=2^{10}$. Then the value of $\det\left(adj\left(adjP\right)\right)$ is:

(a) 81 (b) 16

(c) 124 (d) 32

Q3: Let $f(x)=\int\frac{7x^{10}+9x^{8}}{\left(1+x^{2}+2x^{9}\right)^{2}}dx, x>0,\ \lim_{x\to 0}f(x)=0$ and $f(1)=\frac{1}{4}$. If $A=\begin{bmatrix}0 & 0 & 1\\ \frac{1}{4} & f'(1) & 1\\ \alpha^{2} & 4 & 1\end{bmatrix}$ and

$B=adj(adjA)$ be such that $|B|=81$, then α^{2} is equal to

(a) 2 (b) 4

(c) 3 (d) 1

Q4: The system of linear equations

$x+y+z=6$

$2x+5y+az=36$

$x+2y+3z=b$

has

(a) Unique solution for $a=8$ and $b=16$
(b) Infinitely many solutions for $a=8$ and $b=14$
(c) Infinitely many solutions for $a=8$ and $b=16$
(d) Unique solution for $a=8$ and $b=14$

Q5: Among the statements :

I : If $\begin{vmatrix} 1 & \cos\alpha & \cos\beta \\ \cos\alpha & 1 & \cos\gamma \\ \cos\beta & \cos\gamma & 1 \end{vmatrix} = \begin{vmatrix} 0 & \cos\alpha & \cos\beta \\ \cos\alpha & 0 & \cos\gamma \\ \cos\beta & \cos\gamma & 0 \end{vmatrix}$, then $\cos^2\alpha+\cos^2\beta+\cos^2\gamma=\frac{3}{2}$, and

II : If $\begin{vmatrix} x^2+x & x+1 & x-2 \\ 2x^2+3x-1 & 3x & 3x-3 \\ x^2+2x+3 & 2x-1 & 2x-1 \end{vmatrix} = px+q$, then $p^2=196q^2$

(a) Both are true
(b) Both are false
(c) Only I is true
(d) Only II is true

Q6: Let n be the number obtained on rolling a fair die. If the probability that the system $x-ny+z=6$, $x+(n-2)y+(n+1)z=8$, $(n-1)y+z=1$ has a unique solution is $\frac{k}{6}$, then the sum of k and all possible values of n is:

(a) 22
(b) 20
(c) 24
(d) 21

Q7: If $X=\begin{bmatrix} x \\ y \\ z \end{bmatrix}$ is a solution of the system of equations $AX=B$, where $adjA=\begin{bmatrix} 4 & 2 & 2 \\ -5 & 0 & 5 \\ 1 & -2 & 3 \end{bmatrix}$ and $B=\begin{bmatrix} 4 \\ 0 \\ 2 \end{bmatrix}$, then $|x+y+z|$ is equal to :

(a) 3

(b) 2

(c) $\frac{3}{2}$

(d) 1

Q8: If $A=\begin{bmatrix} 2 & 3 \\ 3 & 5 \end{bmatrix}$, then the determinant of the matrix $\left(A^{2025}-3A^{2024}+A^{2023}\right)$ is

(a) 12

(b) 24

(c) 28

(d) 16

Q9: If the system of equations $3x+y+4z=3$, $2x+\alpha y-z=-3$, $x+2y+z=4$ has no solution, then the value of α is equal to

(a) 13

(b) 4

(c) 19

(d) 23

Q10: For the matrices $A=\begin{bmatrix} 3 & -4 \\ 1 & -1 \end{bmatrix}$ and $B=\begin{bmatrix} -29 & 49 \\ -13 & 18 \end{bmatrix}$, if $\left(A^{15}+B\right)\begin{bmatrix} x \\ y \end{bmatrix}=\begin{bmatrix} 0 \\ 0 \end{bmatrix}$, then among the following which one is true?

(a) $x=16, y=3$

(b) $x=5, y=7$

(c) $x=11, y=2$

(d) $x=18, y=11$

2025

Q1: Let a be a solution of $x^2+x+1=0$, and for some a and b in R,

$\begin{bmatrix} 4 & a & b \end{bmatrix}\begin{bmatrix} 1 & 16 & 13 \\ -1 & -1 & 2 \\ -2 & -1 & 48 \end{bmatrix}=\begin{bmatrix} 0 & 0 & 0 \end{bmatrix}$. If $\frac{4}{\alpha^4}+\frac{m}{\alpha^a}+\frac{n}{\alpha^b}=3$, then m + n is equal to

(a) 11

(b) 3

(c) 8 (d) 7

Q2: Let $A=\begin{bmatrix} 2 & 2+p & 2+p+q \\ 4 & 6+2p & 8+3p+2q \\ 6 & 12+3p & 20+6p+3q \end{bmatrix}$. If $\det\left(adj\left(adj\left(3A\right)\right)\right)=2^m.3^n, m,n\in\mathbb{N}$, then m+n is equal to

(a) 22 (b) 20

(c) 24 (d) 26

Q3: Let the system of equations

x + 5y - z = 1
4x + 3y - 3z = 7
24x + y + λz = μ

λ, μ ∈ ℝ, have infinitely many solutions. Then the number of the solutions of this system,

if x, y, z are integers and satisfy 7 ≤ x + y + z ≤ 77, is :

(a) 4 (b) 5

(c) 3 (d) 6

Q4: Let A be a 3×3 matrix such that $\left|adj\left(adj\left(adjA\right)\right)\right|=81$.

If $S=\left\{n\in\mathbb{Z}:\left(\left|adj\left(adjA\right)\right|\right)^{\frac{(n-2)^2}{2}}=\left|A\right|^{\left(3n^2-5n-4\right)}\right\}$, then $\sum_{n\in S}\left|A^{\left(n^2+n\right)}\right|$ is

(a) 820 (b) 866

(c) 750 (d) 732

Q5: Let the system of equations:

$$2x+3y+5z=9$$
$$7x+3y-2z=8$$
$$12x+3y-\left(4+\lambda\right)z=16-\mu$$

have infinitely many solutions. Then the radius of the circle centred at $\left(\lambda,\mu\right)$ and touching the line $4x=3y$ is :

(a) $\frac{7}{5}$ (b) $\frac{21}{5}$

(c) 7 (d) $\frac{17}{5}$

Q6: Let the matrix $A=\begin{bmatrix}1 & 0 & 0\\ 1 & 0 & 1\\ 0 & 1 & 0\end{bmatrix}$ satisfy $A^n = A^{n-2} + A^2 - I$ for $n \geq 3$. Then the sum of elements of A^{50} is :

(a) 44 (b) 39

(c) 52 (d) 53

Q7: Let A be a matrix of order 3×3 and $|A| = 5$. If $\left|2adj\left(3Aadj\left(2A\right)\right)\right| = 2^{\alpha}\cdot 2^{\beta}\cdot 2^{\gamma}$, $\alpha,\beta,\gamma \in \mathbb{N}$, then $\alpha+\beta+\gamma$ is equal to

(a) 26 (b) 27

(c) 25 (d) 28

Q8: If the system of equations

$$2x+\lambda y+3z=5$$
$$3x+2y-z=7$$
$$4x+5y+\mu z=9$$

has infinitely many solutions, then $\left(\lambda^2+\mu^2\right)$ is equal to

(a) 30 (b) 26

(c) 22 (d) 18

Q9: Let A be a 3×3 real matrix such that $A^2\left(A-2I\right)-4\left(A-I\right)=O$, where I and O are the identity and null matrices, respectively. If $A^5 = \alpha A^2 + \beta A + \gamma I$, where α, β and γ are real constants, then $\alpha+\beta+\gamma$ is equal to

(a) 76 (b) 12

(c) 4 (d) 20

Q10: Let $A=\begin{bmatrix}\alpha & -1\\ 6 & \beta\end{bmatrix}, \alpha>0$,such that $\det(A)=0$ and $\alpha+\beta=1$. If I denotes 2×2 identity matrix, then the matrix $(I+A)^8$ is :

(a) $\begin{bmatrix}257 & -64\\ 514 & -127\end{bmatrix}$

(b) $\begin{bmatrix}766 & -255\\ 1530 & -509\end{bmatrix}$

(c) $\begin{bmatrix}1025 & -511\\ 2024 & -1024\end{bmatrix}$

(d) $\begin{bmatrix}4 & -1\\ 6 & -1\end{bmatrix}$

Q11: Let $a\in\mathbb{R}$ and A be a matrix of order 3×3 such that $\det(A)=-4$ and $A+I=\begin{bmatrix}1 & a & 1\\ 2 & 1 & 0\\ a & 1 & 2\end{bmatrix}$, where I is the identity matrix of order 3×3. If $\det\left((a+1)\,adj\left((a-1)A\right)\right)$ is $2^m 3^n$, $m,n\in\{0,1,2,.....,20\}$, then m+n is equal to

(a) 14

(b) 17

(c) 15

(d) 16

Q12: If the system of linear equations

$$3x+y+\beta z=3$$
$$2x+\alpha y-z=-3$$
$$x+2y+z=4$$

has infinitely many solutions, then the value of $22\beta-9\alpha$ is

(a) 31

(b) 37

(c) 43

(d) 47

Q13: Let $A=\left[a_{ij}\right]$ be a 2×2 matrix such that $a_{ij}\in\{0,1\}$ for all i and j. Let the random variable X denote the possible values of the determinant of the matrix A. Then, the varience of X is

(a) $\frac{5}{8}$

(b) $\frac{1}{4}$

(c) $\frac{3}{4}$

(d) $\frac{3}{8}$

Q14: Let $\alpha, \beta(\alpha \neq \beta)$ be the values of m, for which the equations $x+y+z=1,\ \ x+2y+4z=m$ and $x+4y+10z=m^2$ have infinitely many solutions. Then the value of $\sum_{n=1}^{10}\left(n^{\alpha}+n^{\beta}\right)$ is equal to

(a) 3410 (b) 560

(c) 3080 (d) 440

Q15: Let $A=\left[a_{ij}\right]$ be a matrix of order 3×3, with $a_{ij}=\left(\sqrt{2}\right)^{i+j}$. If the sum of all the elements in the third row of A^2 is $\alpha+\beta\sqrt{2}$, $\alpha,\beta\in\mathbb{Z}$, then $\alpha+\beta$ is equal to:

(a) 210 (b) 280

(c) 224 (d) 168

Q16: Let $A=\left[a_{ij}\right]=\begin{bmatrix}\log_5 128 & \log_4 5\\ \log_5 8 & \log_4 25\end{bmatrix}$. If A_{ij} is the co-factor of a_{ij}, $C_{ij}=\sum_{k=1}^{2}a_{ik}A_{jk}, 1\le i, j\le 2,$ and $C=\left[C_{ij}\right]$, then $8|C|$ is equal to:

(a) 288 (b) 262

(c) 222 (d) 242

Q17: Let L and M respectively be the maximum and minimum values of

$$f(x)=\begin{vmatrix}1+\sin^2 x & \cos^2 x & 4\sin 4x\\ \sin^2 x & 1+\cos^2 x & 4\sin 4x\\ \sin^2 x & \cos^2 x & 1+4\sin 4x\end{vmatrix}, x\in\mathbb{R}.$$ Then M^4-m^4 is equal to:

(a) 1280 (b) 1040

(c) 1215 (d) 1295

Q18: Let $A=\begin{bmatrix}\frac{1}{\sqrt{2}} & -2\\ 0 & 1\end{bmatrix}$ and $P=\begin{bmatrix}\cos\theta & -\sin\theta\\ \sin\theta & \cos\theta\end{bmatrix}, \theta>0.$ If $B=PAP^T$, $C=P^TB^{10}P$ and the sum of the diagonal elements of C is $\frac{m}{n}$, where $\gcd(m,n)=1,$ then $m+n$ is

(a) 127 (b) 2049

(c) 258 (d) 65

Q19: For some a,b, let $\begin{vmatrix} a+\frac{\sin x}{x} & 1 & b \\ a & 1+\frac{\sin x}{x} & b \\ a & 1 & b+\frac{\sin x}{x} \end{vmatrix}, x \neq 0, \lim_{x\to 0} f(x) = \lambda + \mu a + \nu b.$ Then $(\lambda+\mu+\nu)^2$ is equal to

(a) 25 (b) 16

(c) 9 (d) 36

20. If the system of equations

$$x+2y-3z=2$$
$$2x+\lambda y+5z=5$$
$$14x+3y+\mu z=33$$

has infinitely many solutions, $\lambda+\mu$ is equal to

(a) 13 (b) 10

(c) 12 (d) 11

Q21. If the system of equations

$$2x-y+z=4$$
$$5x+\lambda y+3z=12$$
$$100x-47y+\mu z=212$$

has infinitely many solutions, then $\mu-2\lambda$ is equal to

(a) 56 (b) 59

(b) 57 (d) 55

Q22: The system of equations

$$x+y+z=6$$
$$x+2y+5z=9$$
$$x+5y+\lambda z=\mu$$

has no solution if

(a) $\lambda = 17, \mu = 18$ (b) $\lambda = 17, \mu \neq 18$

(c) $\lambda = 15, \mu \neq 17$ (d) $\lambda \neq 17, \mu \neq 18$

Q23: Let $A = \left[a_{ij}\right]$ be a 3×3 matrix such that $A\begin{bmatrix}0\\1\\0\end{bmatrix} = \begin{bmatrix}0\\0\\1\end{bmatrix}$, $A\begin{bmatrix}4\\1\\3\end{bmatrix} = \begin{bmatrix}0\\1\\0\end{bmatrix}$ and $A\begin{bmatrix}2\\1\\2\end{bmatrix} = \begin{bmatrix}0\\1\\0\end{bmatrix}$, then a_{23} equals

(a) 2 (b) -1

(b) 1 (d) 0

Q24: If the system of equations

$$(\lambda - 1)x + (\lambda - 4)y + \lambda z = 5$$
$$\lambda x + (\lambda - 1)y + (\lambda - 4)z = 7$$
$$(\lambda + 1)x + (\lambda + 2)y - (\lambda + 2)z = 9$$

has infinitely many solutions, then $\lambda^2 + \lambda$ is equal to

(a) 20 (b) 10

(c) 6 (d) 12

Q25: If $A, B,$ and $\left(adj\left(A^{-1}\right)\right) + \left(adj\left(B^{-1}\right)\right)$ are non-singular matrices of same order, then the inverse of $A\left(adj\left(A^{-1}\right) + adj\left(B^{-1}\right)\right)^{-1} B$, is equal to

(a) $\dfrac{AB^{-1}}{|A|} + \dfrac{BA^{-1}}{|B|}$ (b) $adj\left(B^{-1}\right) + adj\left(A^{-1}\right)$

(c) $AB^{-1} + A^{-1}B$ (d) $\dfrac{1}{|AB|}\left(adj|B| + adj|A|\right)$

Q26: If the system of linear equations :

$$x + y + 2z = 6$$
$$2x + 3y + az = a + 1$$
$$-x - 3y + bz = 2b$$

where $a, b \in \mathbb{R}$, has infinitely many solutions, then $7a+3b$ is equal to

(a) 12 (b) 9

(b) 22 (d) 16

Q27: For a 3×3 matrix M, let $trace(M)$ denote the sum of all the diagonal elements of M. Let A be a 3×3 matrix such that $|A| = \frac{1}{2}$ and $trace(A) = 3$. If $B = adj\left(adj\left(2A\right)\right)$, then the value of $|B| + trace\left(B\right)$ equals

(a) 56 (b) 132

(c) 174 (d) 280

2024

Q1: Let $B = \begin{bmatrix} 1 & 3 \\ 1 & 5 \end{bmatrix}$ and A be a 2×2 matrix such that $AB^{-1} = A^{-1}$. If $BCB^{-1} = A$ and $C^4 + \alpha C^2 + \beta I = O$, then $2\beta - \alpha$ is equal to

(a) 16 (b) 10

(c) 8 (d) 2

Q2: Let $\lambda, \mu \in \mathbb{R}$. If the system of equations

$$3x+5y+\lambda z = 3$$
$$7x+11y-9z = 2$$
$$97x+155y-189z = \mu$$

has infinitely many solutions , then $\mu + 2\lambda$ is equal to:

(a) 24 (b) 25

(c) 27 (d) 22

Q3: If $\alpha \neq a,\ \beta \neq b,\ \gamma \neq c$ and $\begin{vmatrix} \alpha & b & c \\ a & \beta & c \\ a & b & \gamma \end{vmatrix} = 0,$ then $\dfrac{a}{\alpha - a} + \dfrac{b}{\beta - b} + \dfrac{\gamma}{\gamma - c}$ is equal to:

(a) 2 (b) 3

(c) 1 (d) 0

Q4: If the system of equations

$$x + 4y - z = \lambda,$$
$$7x + 9y + \mu z = -3,$$
$$5x + y + 2z = -1$$

has infinitely many solutions, then $(2\mu + 3\lambda)$ is equal to:

(a) -2 (b) 2

(c) 3 (d) -3

Q5: Let $A = \begin{vmatrix} 2 & a & 0 \\ 1 & 3 & 1 \\ 0 & 5 & b \end{vmatrix}$. If $A^3 = 4A^2 - A - 21A,$ where I is the identity matrix of order 3×3, then $2a + 3b$ is equal to

(a) -10 (b) -12

(c) -13 (d) -9

Q6: If A is a square matrix of order 3 such that $\det(A) = 3$ and $\det\left(adj\left(-4adj\left(-3adj\left(3adj\,(2A)^{-1}\right)\right)\right)\right) = 2^m 3^n$, then $m + 2n$ is equal to:

(a) 2 (b) 4

(c) 3 (d) 6

Q7: For $\alpha, \beta \in \mathbb{R}$ and a natural number n, let $A_r = \begin{vmatrix} r & 1 & \frac{n^2}{2}+\alpha \\ 2r & 2 & n^2-\beta \\ 3r-2 & 3 & \frac{n(3n-1)}{2} \end{vmatrix}$. Then $2A_{10} - A_8$ is

(a) $4\alpha + 2\beta$ (b) 0

(c) 2n (d) $2\alpha + 4\beta$

Q8: The values $m, n,$ for which the system of equations

$x + y + z = 4$,

$2x + 5y + 5z = 17$,

$x + 2y + mz = n$

has infinitely many solutions, satisfy the equation :

(a) $m^2 + n^2 - m - n = 0$ (b) $m^2 + n^2 + mn = 68$

(c) $m^2 + n^2 - mn = 68$ (d) $m^2 + n^2 + m + n = 64$

Q9: Let $\alpha\beta \neq 0$ and $A = \begin{vmatrix} \beta & \alpha & 3 \\ \alpha & \alpha & \beta \\ -\beta & \alpha & 2\alpha \end{vmatrix}$. If $B = \begin{bmatrix} 3\alpha & -9 & 3\alpha \\ -\alpha & 7 & -2\alpha \\ -2\alpha & 5 & -2\beta \end{bmatrix}$ is the matrix of cofactors of the elements of A, then $\det(AB)$ is equal to

(a) 64 (b) 343

(c) 125 (d) 216

Q10: Let A and B be two square matrices of order 3 such that $|A| = 3$ and $|B| = 2$. Then $\left| A^T A\left(adj\left(2A\right)\right)^{-1}\left(adj(4B)\right) adj(AB)^{-1} AA^T \right|$ is equal to:

(a) 32 (b) 81

(c) 64 (d) 108

Q11: If the system of equations

$11x + y + \lambda z = -5$,

$2x + 3y + 5z = 3$,

$8x - 19y - 39z = \mu$

has infinitely many solutions, $\lambda^4 - \mu$ is equal to :

(a) 51 (b) 45

(c) 47 (d) 49

Q12: Let $A = \begin{bmatrix} 1 & 2 \\ 0 & 1 \end{bmatrix}$ and $B = I + adj(A) + (adjA)^2 + ... + (adjA)^{10}$. Then, the sum of all the elements of the matrix B is

(a) -110 (b) 22

(c) -124 (d) -88

Q13: Let $\alpha \in (0, \infty)$ and $A = \begin{bmatrix} 1 & 2 & \alpha \\ 1 & 0 & 1 \\ 0 & 1 & 2 \end{bmatrix}$. If $\det\left(adj\left(2A - A^T\right).adj\left(A - 2A^T\right)\right) = 2^8$, then $\left(\det(A)\right)^2$ is equal to

(a) 16 (b) 36

(c) 49 (d) 1

Q14: If the system of equations

$$x + \left(\sqrt{2}\sin\alpha\right)y + \left(\sqrt{2}\cos\alpha\right)z = 0,$$
$$x + (\cos\alpha)y + (\sin\alpha)z = 0,$$
$$x + (\sin\alpha)y - (\cos\alpha)z = 0$$

has a non-trivial solution, then $\alpha \in \left(0, \frac{\pi}{2}\right)$ is equal to

(a) $\frac{5\pi}{24}$ (b) $\frac{11\pi}{24}$

(b) $\frac{7\pi}{24}$ (d) $\frac{3\pi}{4}$

Q15: Let the system of equations

$$x + 2y + 3z = 5,$$
$$2x + 3y + z = 9,$$

$4x+3y+\lambda z=\mu$

have infinite number of solutions. Then $\lambda+2\mu$ is equal to:

(a) 22 (b) 17

(c) 15 (d) 28

Q16: If $A=\begin{bmatrix}\sqrt{2} & 1\\ -1 & \sqrt{2}\end{bmatrix}$, $B=\begin{bmatrix}1 & 0\\ 1 & 1\end{bmatrix}$, $C=ABA^T$ and $X=A^TC^2A$, then $\det X$ is equal to

(a) 243 (b) 729

(b) 27 (d) 891

Q17: If the system of equations

$2x+3y-z=5$,
$x+\alpha y+3z=-4$,
$3x-y+\beta z=7$

has infinitely many solutions, then $13\alpha\beta$ is equal to

(a) 1110 (b) 1120

(c) 1210 (d) 1220

Q18: Let A be a 3×3 real matrix such that $A\begin{pmatrix}1\\0\\1\end{pmatrix}=2\begin{pmatrix}1\\0\\1\end{pmatrix}$, $A\begin{pmatrix}-1\\0\\1\end{pmatrix}=4\begin{pmatrix}-1\\0\\1\end{pmatrix}$, $A\begin{pmatrix}0\\1\\0\end{pmatrix}=2\begin{pmatrix}0\\1\\0\end{pmatrix}$. Then the system $(A-3I)\begin{pmatrix}x\\y\\z\end{pmatrix}=\begin{pmatrix}1\\2\\3\end{pmatrix}$ has :

(a) Exactly two solutions (b) Infinitely many solutions

(b) Unique solution (d) No Solution

Q19: If the system of linear equations

$x-2y+z=-4$,
$2x+\alpha y+3z=5$,
$3x-y+\beta z=3$.

has infinitely many solutions, then $12\alpha+13\beta$ is equal to

(a) 60 (b) 54

(b) 64 (d) 58

Q20: Let $R=\begin{pmatrix} x & 0 & 0 \\ 0 & y & 0 \\ 0 & 0 & z \end{pmatrix}$ be a non-zero 3×3 matrix, where

$x\sin\theta = y\sin\left(\theta+\frac{2\pi}{3}\right)=z\sin\left(\theta+\frac{4\pi}{3}\right)\neq 0.\ \theta\in(0,2\pi)$. For a square matrix M, let $trace(M)$ denote the sum of all the diagonal entries of M. Then among the statements :

(I) Trace (R) = 0

(II) If trace$\left(adj\left(adjR\right)\right)$ = 0 , then R has exactly one non-zero entry.

(a) Only (I) is true.
(b) Only (II) is true.
(c) Both (I) and (II) are true.
(d) Neither (I) nor (II) is true.

Q21: Consider the system of linear equations

$x+y+z=5$,
$x+2y+\lambda^2 z=9$,
$x+3y+\lambda z=\mu$,

where $\lambda,\mu\in\mathbb{R}$. Then which of the following statement is NOT correct?

(a) System is consistent if $\lambda\neq 1$ and $\mu=13$.
(b) System is inconsistent if $\lambda=1$ and $\mu\neq 13$.
(c) System has a unique solution if $\lambda\neq 1$ and $\mu\neq 13$.
(d) System has infinite number of solutions if $\lambda=1$ and $\mu=13$.

Q22. Consider the system of linear equations

$x+y+z=4\mu$,
$x+2y+2\lambda z=10\mu$,
$x+3y+4\lambda^2 z=\mu^2+15$.

where $\lambda,\mu\in\mathbb{R}$. Which of the following statements is NOT correct?

(a) The system has unique solution if $\lambda\neq\frac{1}{2}$ and $\mu\neq 11,15$

(b) The system has infinite number of solutions if $\lambda=\frac{1}{2}$ and $\mu=15$

(c) The system is consistent if $\lambda\neq\frac{1}{2}$

(d) The system is inconsistent if $\lambda=\frac{1}{2}$ and $\mu\neq 1$

Q23: Let $A=\begin{bmatrix}2&1&2\\6&2&11\\3&3&2\end{bmatrix}$ and $P=\begin{bmatrix}1&2&0\\5&0&2\\7&1&5\end{bmatrix}$. The sum of the prime factors of $\left|P^{-1}AP-2I\right|$ is equal to

(a) 66 (b) 27

(c) 23 (d) 26

Q24: Let $A=\begin{bmatrix}1&0&0\\0&\alpha&\beta\\0&\beta&\alpha\end{bmatrix}$ and $|2A|^3=2^{21}$ where $\alpha,\beta\in\mathbb{Z}$. Then a value of α is

(a) 9 (b) 17

(c) 3 (d) 5

Q25: Let A be a square matrix such that $AA^T=I$. Then $\frac{1}{2}A\left[\left(A+A^T\right)^2+\left(A-A^T\right)^2\right]$ is equal to

(a) A^2+A^T (b) A^3+I

(c) A^3+A^T (d) A^2+I

Q26: The values of α , for which $\begin{vmatrix} 1 & \frac{3}{2} & \alpha+\frac{3}{2} \\ 1 & \frac{1}{3} & \alpha+\frac{1}{3} \\ 2\alpha+3 & 3\alpha+1 & 0 \end{vmatrix} = 0,$ lie in the interval

(a) $(-2,1)$

(b) $\left(-\frac{3}{2},\frac{3}{2}\right)$

(c) $(-3,0)$

(d) $(0,3)$

Q27: Consider the matrix $f(x) = \begin{bmatrix} \cos x & -\sin x & 0 \\ \sin x & \cos x & 0 \\ 0 & 0 & 1 \end{bmatrix}$.

Given below are two statements :

Statement I :

2017

3. If A = $\begin{bmatrix} 2 & -3 \\ -4 & 1 \end{bmatrix}$, then $adj(3A^2+12A)$ is equal to:

(1) $\begin{bmatrix} 72 & -84 \\ -63 & 51 \end{bmatrix}$

(2) $\begin{bmatrix} 51 & 63 \\ 84 & 72 \end{bmatrix}$

(3) $\begin{bmatrix} 51 & 84 \\ 63 & 72 \end{bmatrix}$

(4) $\begin{bmatrix} 72 & -63 \\ -84 & 51 \end{bmatrix}$

2016

1. If A = $\begin{bmatrix} 5a & -b \\ 3 & 2 \end{bmatrix}$ and $A\,adj\,A = AA^T$, then 5a +b is equal to :

(1) 5

(2) 4

(3) 13

(4) -1

2015

1. If A = $\begin{bmatrix} 1 & 2 & 2 \\ 2 & 1 & -2 \\ a & 2 & b \end{bmatrix}$ is a matrix satisfying the equation $AA^T = 9I$, where I is 3×3 identity matrix, then ordered pair (a,b) is equal to :

(1) (-2,1) (2) (2,1)
(3) (-2,-1) (4) (2,-1)

2014

1. If A is a 3×3 non-singular matrix such that AA'=A'A and $B = A^{-1}A$, then BB' equals

(1) I + B (2) I
(3) B^{-1} (4) $\left(B^{-1}\right)'$

2013

1. If P = $\begin{bmatrix} 1 & \alpha & 3 \\ 1 & 3 & 3 \\ 2 & 4 & 4 \end{bmatrix}$ is the adjoint of a 3×3 matrix A and |A|=4, then α is equal to

(1) 11 (2) 5
(3) 0 (4) 4

2012

1. Let A = $\begin{pmatrix} 1 & 0 & 0 \\ 2 & 1 & 0 \\ 3 & 2 & 1 \end{pmatrix}$. If $u_1$and u_2 are column matrices such that Au_1= $\begin{pmatrix} 1 \\ 0 \\ 0 \end{pmatrix}$ and Au_2 = $\begin{pmatrix} 0 \\ 1 \\ 0 \end{pmatrix}$, then u_1+ u_2 is equal to

(1) $\begin{pmatrix} -1 \\ -1 \\ 0 \end{pmatrix}$ (2) $\begin{pmatrix} 1 \\ -1 \\ -1 \end{pmatrix}$

(3) $\begin{pmatrix} -1 \\ 1 \\ 0 \end{pmatrix}$ (4) $\begin{pmatrix} -1 \\ 1 \\ -1 \end{pmatrix}$

2011

1. If $\omega \neq 1$ is the complex cube root of unity and matrix H = $\begin{bmatrix} \omega & 0 \\ 0 & \omega \end{bmatrix}$, then H^{70} is equal to

(1) H^2 (2) H

(3) 0 (4) -H

2010

1. The number of 3×3 non-singular matrices, with four entries as 1 and all other entries as 0, is

(1) 5 (2) 6

(3) at least 7 (4) less than 4

2008

1. Let A be a square matrix all of whose entries are integers. Then which one of the following is true?

(1) If detA = ±1 , then A^{-1} exists but all its entries are not necessarily integers

(2) If detA = ±1 , then A^{-1} exists and all its entries are non-integers

(3) If detA = ±1 , then A^{-1} exists and all its entries are integers

(4) If detA = ±1 , then A^{-1} need not exist

2007

1. Let A = $\begin{bmatrix} 5 & 5\alpha & \alpha \\ 0 & \alpha & 5\alpha \\ 0 & 0 & 5 \end{bmatrix}$. If | A^2 | = 25, then $|\alpha|$ equals

(1) 5^2 (2) 1

(3) 1/5 (4) 5

2006

1. If A and B are square matrices of size $n\times n$ such that $A^2 - B^2 = (A-B)(A+B)$, then which of the following will be always true?

(5) A = B

(6) AB = BA

(7) Either of A or B is a zero matrix

(8) Either of A or B is an identity matrix

2. Let A = $\begin{pmatrix} 1 & 2 \\ 3 & 4 \end{pmatrix}$ and B = $\begin{pmatrix} a & 0 \\ 0 & b \end{pmatrix}$, a , b $\in$ N. Then

(1) there cannot exist any B such that AB = BA

(2) there exist more than one but finite number of B's such that AB = BA

(3) there exists exactly one B such that AB = BA

(4) there exist infinitely many B's such that AB = BA

3. If $A^2 - A + I = 0$, then the inverse of A is

(2) A + I (2) A

(3) A – I (4) I – A

2005

1. If A = $\begin{bmatrix} 1 & 0 \\ 1 & 1 \end{bmatrix}$ and I = $\begin{bmatrix} 1 & 0 \\ 0 & 1 \end{bmatrix}$, then which one of the following holds for all $n \geq 1$, by the principle of mathematical induction

(3) $A^n = nA - (n-1)I$ (2) $A^n = 2^{n-1}A - (n-1)I$

(3) $A^n = nA + (n-1)I$ (4) $A^n = 2^{n-1}A + (n-1)I$

2004

1. Let $A = \begin{pmatrix} 0 & 0 & -1 \\ 0 & -1 & 0 \\ -1 & 0 & 0 \end{pmatrix}$. The only correct statement about the matrix A is

(1) A is a zero matrix (2) $A^2 = I$

(3) A^{-1} does not exist (4) A = (-1)I, where I is a unit matrix

2. Let $A = \begin{pmatrix} 1 & -1 & 1 \\ 2 & 1 & -3 \\ 1 & 1 & 1 \end{pmatrix}$(10) and $B = \begin{pmatrix} 4 & 2 & 2 \\ -5 & 0 & \alpha \\ 1 & -2 & 3 \end{pmatrix}$. If B is the inverse of matrix A , then α is

(1) -2 (2) 5

(3) 2 (4) -1

2003

1. If $A = \begin{bmatrix} a & b \\ b & a \end{bmatrix}$ and $A^2 = \begin{bmatrix} \alpha & \beta \\ \beta & \alpha \end{bmatrix}$, then

(1) $\alpha = a^2 + b^2$, $\beta = ab$ (2) $\alpha = a^2 + b^2$, $\beta = 2ab$

(3) $\alpha = a^2 + b^2$, $\beta = a^2 - b^2$ (4) $\alpha = 2ab$ $\beta = a^2 + b^2$

Assertion-Reason type

2011

1. Consider the following relation **R** on the set of real square matrices of order 3.

R = {(A,B)|A = $P^{-1}BP$ for some invertible matrix P}.

Statement – I : R is an equivalence relation.

Statement-II : For any two invertible 3×3 matrices M and N, $(MN)^{-1} = N^{-1}M^{-1}$.

(5) Statement-I is True; Statement-II is true; Statement-II is **not** a correct explaination of Statement-I.
(6) Statement-I is True; Statement-II is False.
(7) Statement-I is False; Statement-II is true
(8) Statement-I is True; Statement-II is true; Statement-II is a **correct** explaination of Statement-I.

2010

1. Let A be a 2×2 matrix with non-zero entries and let $A^2 = I$, where I is 2×2 identity matrix. Define Tr(A) = sum of diagonal elements of A and |A| = determinant of matrix A.

Statement-I : Tr(A) = 0

Statement-II : |A|=1

(4) Statement-I is True; Statement-II is true; Statement-II is **not** a correct explaination of Statement-I.
(5) Statement-I is True; Statement-II is False.
(6) Statement-I is False; Statement-II is true
(7) Statement-I is True; Statement-II is true; Statement-II is a **correct** explaination of Statement-I.

2009

1. Let A be a 2×2 matrix

Statement-I : adj(adj A) = A

Statement-II : |adj A| = |A|

(4) Statement-I is True; Statement-II is true; Statement-II is **not** a correct explaination of Statement-I.
(5) Statement-I is True; Statement-II is False.
(6) Statement-I is False; Statement-II is true
(7) Statement-I is True; Statement-II is true; Statement-II is a **correct** explaination of Statement-I.

2008

1. Let A be a 2×2 matrix with real entries. Let I be the 2×2 identity matrix. Denote by tr(A), the sum of diagonal entries of A. Assume that $A^2 = I$

Statement-I : If $A \neq I$ and $A \neq -I$, then det A = -1.

Statement-II : If $A \neq I$ and $A \neq -I$, then $tr(A) \neq 0$

(5) Statement-I is True; Statement-II is true; Statement-II is **not** a correct explaination of Statement-I.
(6) Statement-I is True; Statement-II is False.
(7) Statement-I is False; Statement-II is true
(8) Statement-I is True; Statement-II is true; Statement-II is a **correct** explaination of Statement-I.